# SECTION 9.5

# STEAM POWER PLANTS

IGOR J. KARASSIK
RICHARD P. KOCH

## STEAM POWER PLANT CYCLES

Power is produced in a steam power plant by supplying heat energy to the feedwater, changing it into steam under pressure, and then transforming part of this energy into mechanical energy in a heat engine to do useful work. The feedwater therefore acts merely as a conveyor of energy. The basic elements of a steam power plant are the heat engine, the boiler, and a means of getting water in the boiler. Modern power plants use steam turbines as heat engines; except for very small plants, centrifugal boiler-feed pumps are used.

This basic cycle is improved by connecting a condenser to the steam turbine exhaust and by heating the feedwater with steam extracted from an intermediate stage of the main turbine. This results in an improvement of the cycle efficiency, provides deaeration of the feedwater, and eliminates the introduction of cold water into the boiler and the resulting temperature strains on the latter. The combination of the condensing and feedwater heating cycle (Figure 1) requires a minimum of three pumps: the condensate pump, which transfers the condensate from the condenser hot well into the direct-contact heater; the boiler-feed pump; and a circulating pump, which forces cold water through the condenser tubes to condense the exhaust steam. This cycle is very common and is used in most small steam power plants. A number of auxiliary services not illustrated in Figure 1 are normally used, such as service water pumps, cooling pumps, ash-sluicing pumps, oil-circulating pumps, and the like.

The required improvements in operating economy in the 1970s dictated further refinements in the steam cycle, and these created new demands for power plant centrifugal pumping equipment. This evolution involved a steady increase in operating pressures until 2400 lb/in$^2$ (165 bar*) steam turbines became quite common. Many plants are operating at supercritical steam pressures of 3500 lb/in$^2$ (240 bar). Several central station

---

*1 bar = $10^5$ Pa.

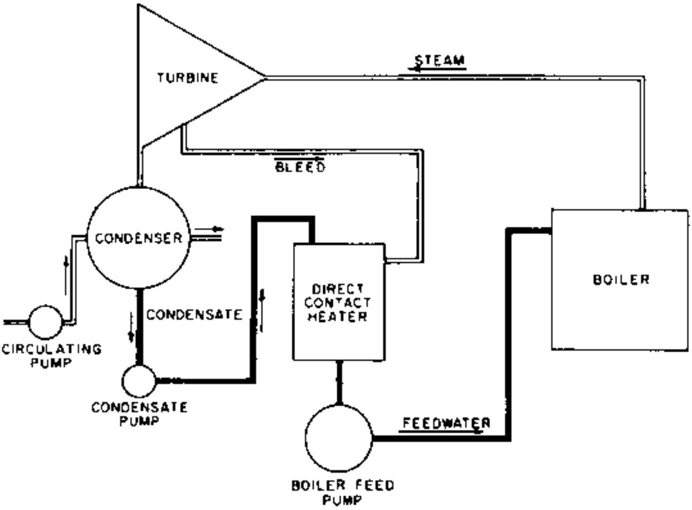

**FIGURE 1** Simple steam power cycle

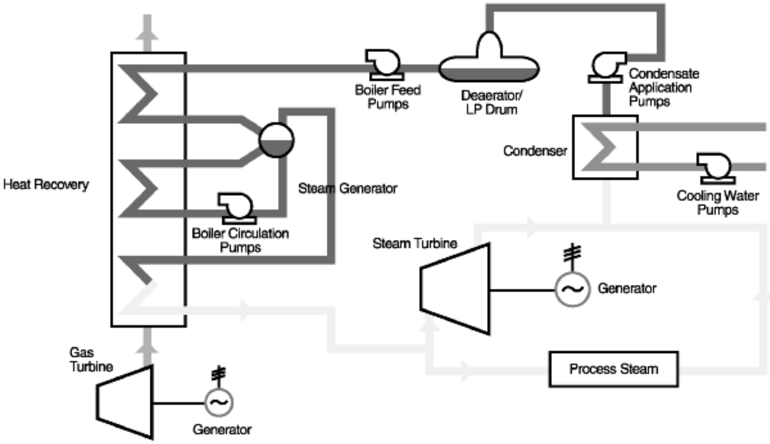

**FIGURE 2** Natural gas and steam, combined cycle power

plants constructed in the late 1970s are operating between 4000 and 5000 lb/in$^2$ (275 and 345 bar).

Other refinements were directed toward a greater utilization of heat through increased feed-water heating, introducing a need for heater drain pumps-equipment with definite problems of its own. Finally, the introduction of forced or controlled circulation as opposed to natural circulation at 650°F (343°C) in boilers created a demand for pumping equipment of again an entirely special character.

Although direct-contact heaters would have thermodynamic advantages, a separate pump would be required after each such heater. The use of a group of closed heaters permits a single boiler feed pump to discharge through these heaters and into the boiler. The average power plant is based on a compromise system: one direct-contact heater is used for feedwater deaeration, whereas several additional heaters of the closed type are located

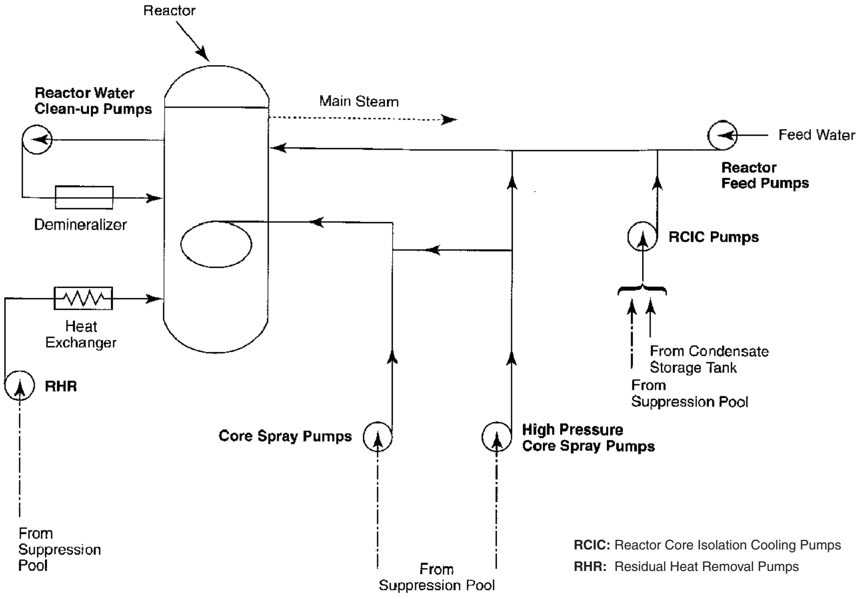

**FIGURE 3** Nuclear power steam cycle, boiling water reactor

upstream as well as downstream of the direct-contact heater and of the boiler-feed pump (Figure 5). Such a cycle is termed an *open cycle.* The major variation is the *closed cycle,* where the deaeration is accomplished in the condenser hot well and all heaters are of the closed type (Figure 6).

Electric power generation technology advanced into the 1970s when the conventional coal and gas fired boilers were replaced with nuclear fission reactors. Nuclear power generation utilizes two concepts for generating steam: boiling water reactors (Figure 3) where the feedwater travels directly to the reactor, and pressurized water reactors (Figure 4) where the feedwater travels through a steam generator.

In the 1980s, the evolution of power generation industry continued with the construction of combined-cycle units. This technology increased the efficiency and improved the heat rate by utilizing the exhaust gases of primary gas turbines to produce valuable steam to drive steam-powered generators (Figure 2). Gas turbine-fired plant construction expanded as emphasis increased on environental issues related to coal- and oil-fired plants.

## STEAM POWER PLANT PUMPING SERVICES

Pumps are very important components of a steam electric power plant. The major applications are the condensate, boiler-feed, heater drain, and condenser circulating pumps. The all-inclusive category of “miscellaneous pumps” includes such a variety of services that it merits being broken down into its components and included in a representative listing. Table 1 provides such a listing for conventional (fossil fuel) steam power plants. The list is not necessarily complete but is reasonably representative.

## BOILER-FEED PUMPS

Under the term *conditions of service* are included not only the pump capacity, discharge pressure, suction conditions, and feedwater temperature but also the chemical analysis of

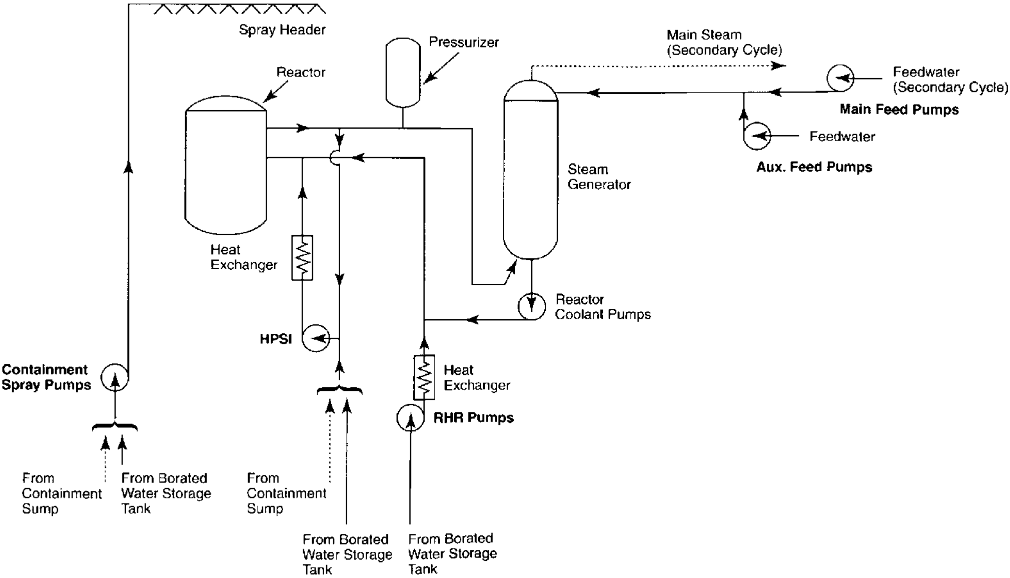

**RHR:** Residual Heat Removal Pumps
**HPSI:** High Pressure Safety Injection Pumps

**FIGURE 4** Nuclear power steam cycle, pressurized water reactor

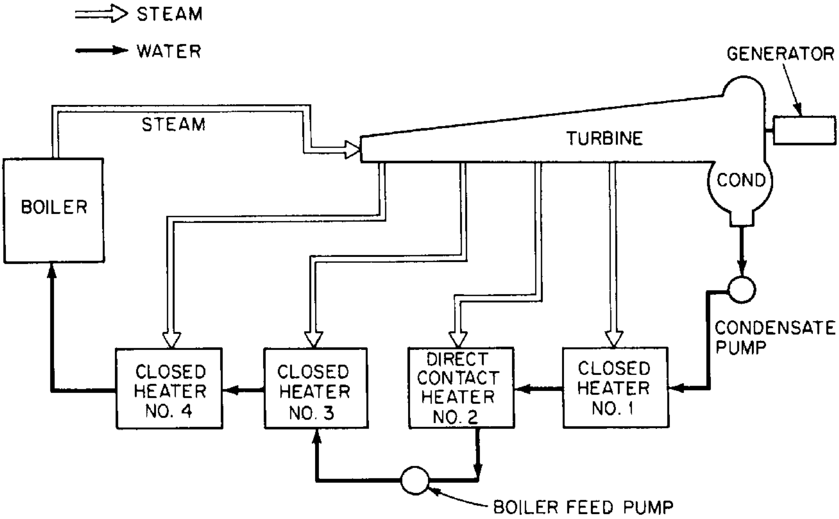

**FIGURE 5** Open feedwater cycle with one deaerator and several closed heaters

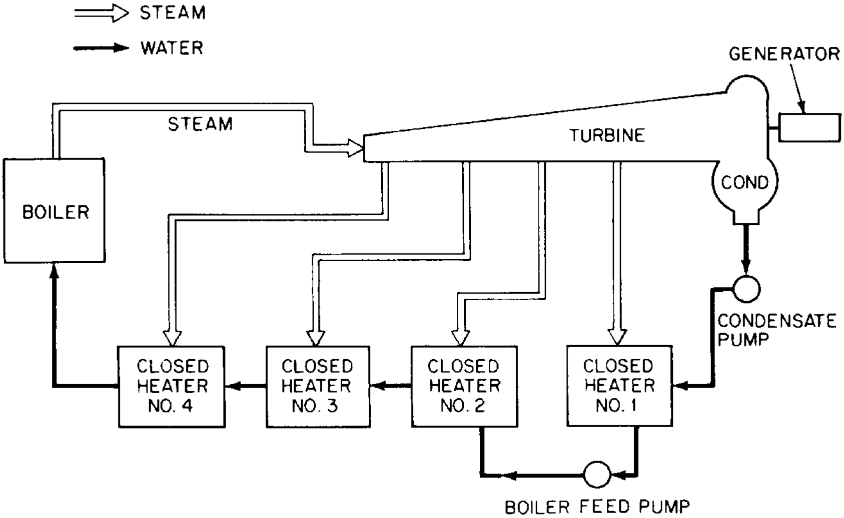

**FIGURE 6** Closed feedwater cycle

the feedwater, the pH at pumping temperature, and other pertinent data that may reflect upon the hydraulic and mechanical design of the boiler-feed pumps. Preferably, a complete layout of the feedwater system and of the heat balance diagram should be supplied to the boiler-feed pump manufacturer. The study of this layout will often permit the manufacturer to suggest an alternate arrangement of the equipment that would result in a more economical operation, in a lower installation cost, or even in longer equipment life to reduce the eventual maintenance expense.

**TABLE 1** Pump services in conventional steam power plants

- Turbogenerator and auxiliaries
  - Condenser circulating pumps
  - Screen wash-water pumps
  - Cooling tower make-up pumps
- Steam generator equipment
  - Condensate pumps
  - Condensate booster pumps
  - Boiler-feed pumps
  - Boiler-feed booster pumps
  - Deaerator make-up pumps
  - Heater drain pumps (low and high pressure)
- Chemical feed system
  - Amine pumps
  - Hydrazine pumps
  - Phosphate pumps
  - Caustic feed pumps
  - Acid feed pumps
  - Ammonia pumps
  - Regeneration waste pumps
  - Demineralizer pumps
  - Neutralizing metering pumps
  - Neutralizing tank sump pumps
  - Acid bulk-transfer pumps
  - Caustic bulk-transfer pumps
  - Inlet and effluent demineralizer waste tank pumps
- Fuel oil system
  - Fuel oil transfer pumps
  - Secondary fuel oil pumps
  - Secondary fuel oil heater drip pumps
  - Ignitor oil pumps
  - Auxiliary boiler fuel pumps
  - Warm-up oil pumps
  - High-temperature oil-circulating pumps
- Fuel oil system (continued)
  - Low-temperature oil-circulating pumps
  - Distillate oil unloading pumps
  - Fuel oil additive unloading pumps
  - Fuel oil additive transfer pumps
  - Fuel oil additive metering pumps
  - Fuel oil hose drain pumps
- Lubricating oil system
  - Lubricating transfer pumps
  - Starting oil pumps
  - Main oil pumps
  - Emergency oil pumps
  - Centrifuge feed pumps
- Fire protection system
  - Fire pumps
  - Jockey pumps
  - Foam proportioning pumps
- Heating, ventilating, and air conditioning system
  - Hot water circulating pumps
  - Chilled water pumps
- Service water system
  - Service water pumps
  - Air preheater wash pumps
  - Cooling water booster pumps
  - Primary air heating coil condensate return pumps
  - Heating drain tank return pumps
  - Sump pumps
  - Closed cooling water system pumps
- Miscellaneous
  - Ash sluice pumps
  - Slurry pumps
  - Acid cleaning pumps
  - Hydrostatic pressure test pumps

***Boiler-Feed Pump Capacity*** The total boiler-feed pump capacity is established by adding to the maximum boiler flow a margin to cover boiler swings and the eventual reduction in effective capacity from wear. This margin varies from as much as 20% in small plants to as little as 5% in the larger central stations. The total required capacity must be either handled by a single pump or subdivided between several duplicate pumps operating in parallel. Industrial power plants generally use several pumps. Central stations tend to use single full-capacity pumps to serve turbogenerators up to a rating of 100 or even 200 MW and two pumps in parallel for larger installations. There are obviously exceptions to this practice: some engineers prefer the use of multiple pumps even for small installations, whereas single steam-turbine-driven boiler-feed pumps designed for full capacity are installed for units as large as 1300 MW (Figure 7). A spare boiler-feed pump is generally included in industrial plants. The trend in combined cycle cogeneration plants is to install two 100% capacity pumps. This provides optimum reliability and availability. Combined cycle plants are equipped with multiple feedwater pump arrangements related to the gas turbine exhaust stage pressure. Installation variations include high pressure intermediate pressure (often a stage take-off from the high pressure pump) and the low pressure feedwater pumps.

***Suction Conditions*** The net positive suction head (*NPSH*) represents the net suction head at the pump suction, referred to the pump centerline, *over and above* the vapor pressure of the feedwater. If the pump takes its suction from a deaerating heater, as in Figure 5, the feedwater in the storage space is under a pressure equivalent to the vapor pressure corresponding to its temperature. Therefore the *NPSH* is equal to the static sub-

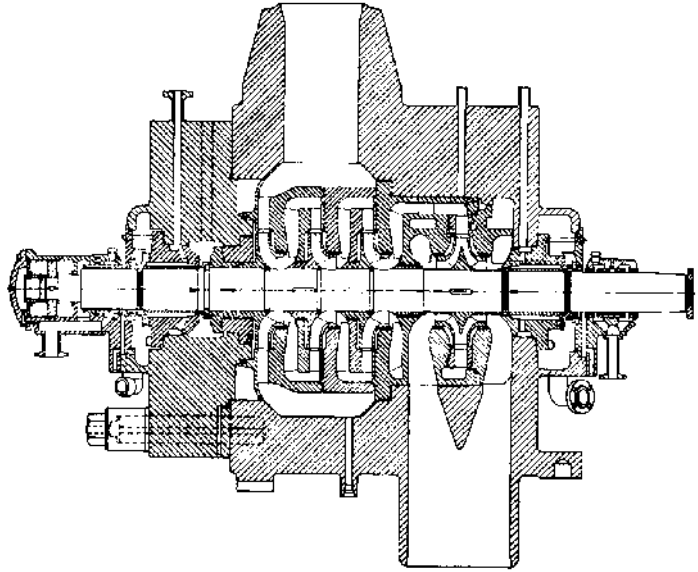

**FIGURE 7** Cross-section, single 65,000 hp boiler feed pump, 1300 MW fossil power plant (Flowserve Corporation)

mergence between the water level in the storage space and the pump centerline less the frictional losses in the intervening piping. Theoretically, the required *NPSH* is independent of operating temperature. Practically, this temperature must be taken into account when establishing the recommended submergence from the deaerator to the boiler-feed pump. A margin of safety must be added to the theoretical required *NPSH* to protect the boiler-feed pumps against the transient conditions that follow a sudden reduction in load for the main turbogenerator.

Although the previous discussion applies primarily to the majority of installations, where the boiler-feed pump takes its suction from a deaerating heater, it holds as well in the closed feed cycle (Figure 6). The discharge pressure of the condensate pump or the booster pump must be carefully established so the suction pressure of the boiler-feed pump cannot fall below the sum of the vapor pressure at pumping temperature and the required *NPSH*.

Careful attention must be given to any strainer that might be installed in the pump suction piping. The pressure drop increase across the strainer is indicative of foreign material and it reduces the net positive suction head available (*NPSHA*) to the pump. Strainers in the pump suction pipe are most often removed following plant start-up qualification testing.

***Transient Conditions Following Load Reduction*** Following a sudden load reduction, the turbine governor reduces the steam flow in order to maintain the proper relation between turbine and generator power and to hold the unit at synchronous speed. The consequence of this reduction is a proportionate pressure reduction at all successive turbine stages, including the bleed stage that supplies steam to the deaerator. The check valve in the extraction line closes and isolates the heater from the turbine. As hot feedwater continues to be withdrawn from the heater and cold condensate to be admitted to the heater, the pressure in the direct-contact heater starts to drop rapidly. The check valve reopens when the heater pressure has been reduced to the prevailing extraction pressure and stable conditions are reestablished.

It should be noted that, even though the feedwater system in a drum boiler may be provided with a three-element feedwater regulator, the feedwater flow will not instantaneously follow the steam flow as soon as the steam demand is reduced by a reduction in unit load. Because of the time lag between the reduction in steam demand and that of the fuel-burning rate and because of the heat retention in the steam generator, there is a momentary rise in the boiler pressure, with the resultant collapse of some of the steam and water bubbles in the boiler drum. This lowers the apparent boiler drum level, causing the level control to override to some degree the impulse from the change in steam flow. Therefore, there will generally be a definite lack of correlation between feedwater and steam flow following a sudden drop in load. The exact degree of the difference between these two flows will depend upon the particular type and setting of the feedwater controls. In some extreme cases, the feedwater flow after a sudden drop in load can actually exceed the feedwater flow at maximum design conditions. Thus, it is a safer practice to assume that the feedwater flow will not be reduced and to assume that the *NPSH* required will in turn correspond to at least its value under flow conditions preceding the drop in load.

In the interval, however, the pressure at the boiler-feed pump suction is reduced correspondingly. Unfortunately, until the suction piping has been completely voided of the feedwater it contained prior to the load reduction, its temperature and vapor pressure will not be reduced. As a consequence, the available *NPSH* will diminish and may become insufficient to provide adequate pump operation. In such a case, the pump will flash and serious damage may be incurred.

The factor that establishes the adequacy of an installation from the point of view of suction conditions after a load drop is the ratio between the direct-contact heater storage capacity and the suction piping volume. Based on a number of simplifying assumptions, a formula has been developed for the minimum value of this ratio:

$$\text{Minimum } \frac{Q_h}{Q_s} = \frac{h_{x0} - h_{c2}}{K_h H_x} \tag{1}$$

where $Q_h$ = volume of feedwater in heater storage, gal (m$^3$)
$Q_s$ = volume of feedwater in suction piping, gal (m$^3$)
$h_{x0}$ = enthalpy of feedwater under initial conditions, Btu/lb (J/kg)
$h_{c2}$ = enthalpy of condensate to heater under final conditions, Btu/lb (J/kg)
$K_h$ = change in enthalpy with pressure at steam conditions prior to load reduction, Btu/lb • ft absolute pressure (J/kg • m) (Figure 8)
$H_x$ = available excess *NPSH* = *NPSH* available − *NPSH* required, ft (m)

This relationship is somewhat conservative and does not take into account the residence time of the condensate in the piping and the closed heaters between the condenser hot well and the direct-contact heater. A slightly less conservative formula that takes some account of this residence time is

$$\text{Minimum } \frac{Q_h}{Q_s} = \frac{h_{x0} - [(h_{c0} + h_{c2})/2]}{K_h H_x} \tag{2}$$

where $h_{c0}$ = enthalpy of condensate to heater under initial conditions, Btu/lb (J/kg)

For example, let

Initial heater pressure = 153 lb/in$^2$ (10.5 bar)
Initial feedwater temperature = 360°F (182°C)
Initial feedwater enthalpy = 331.4 Btu/lb (770.8 kJ/kg)
Final condensate enthalpy = 82.95 Btu/lb (192.9 kJ/kg)
$K_h$ (from Figure 8) = 0.22 Btu/lb/ft (1679 J/kg/m)
$H_x$ (available excess *NPSH*) = 15 ft (4.57 m)

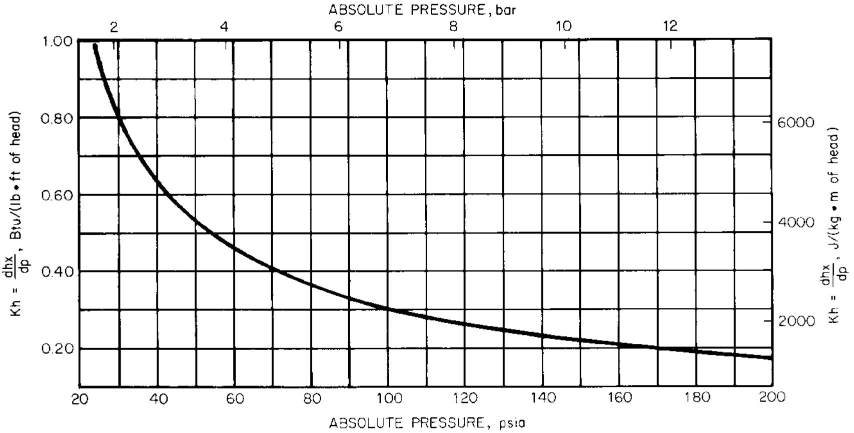

**FIGURE 8** Enthalpy change with change of vapor pressure, for water

Then

in USCS units $$\text{Minimum } \frac{Q_h}{Q_s} = \frac{331.4 - 82.95}{0.22 \times 15} = 75.3$$

in SI units $$\text{Minimum } \frac{Q_h}{Q_s} = \frac{770{,}800 - 192{,}900}{1679 \times 4.57} = 75.3$$

This means that for safe operation after a sudden load drop in this particular ease, the heater storage volume must be at least 75.3 times the volume of the suction piping.

More complex and more rigorous calculations of the minimum ratio of heater storage volume to suction piping volume are provided in Reference 1.

Even where analysis indicates that the boiler-feed pumps are assured of their required *NPSH* during a reduction in turbine load, there is no guarantee that their operation will not be interrupted by flashing at some point in the suction piping. The criterion in determining the probability of flashing in the suction piping is to consider that the water that left the heater outlet at a saturated condition must pick up static pressure, by means of the vertical drop, at a rate at least equal to the pressure decay rate of the heater, or it will flash.

The most adverse conditions are those introduced by locating a horizontal run of piping too close to the heater outlet. A typical case is illustrated in Figure 9. (Because this example is used merely to illustrate the unfavorable effect of such a piping layout, the unit system used is immaterial and the example has been expressed in USCS units.) In the comparison of the two installations, we will stipulate that the total length and the sizes of the piping are the same for both arrangements and that the volumes of the suction piping between the heater outlet and points *C* and *E* of the two arrangements are the same. To simplify the comparison, the vertical distances between *A* and *B, B* and *D,* and *A* and *E* have been expressed in pounds per square inch instead of feet.

If a time interval *x* is selected such that water having left the heater outlet at the start of the transient conditions will have reached points *C* and *E,* respectively, at the end of the time interval, it becomes apparent that in the case illustrated on the left side of Figure 9, the pressure gain at point *C* is only 3 lb/in$^2$ by virtue of the vertical drop. Thus, *x* seconds after a pressure drop in the direct-contact heater from 52 to 48 lb/in$^2$ gage, the pressure at point *C* will be 51 lb/in$^2$, which is below the vapor pressure at the new temperature (296°F), and so flashing will occur. On the other hand, in the case of a straight vertical drop (right side of Figure 9), after the same time interval *x* the pressure will be 60 lb/in$^2$, which exceeds the vapor pressure, and so no flashing will occur. Formulas 1 and 2 can be used to

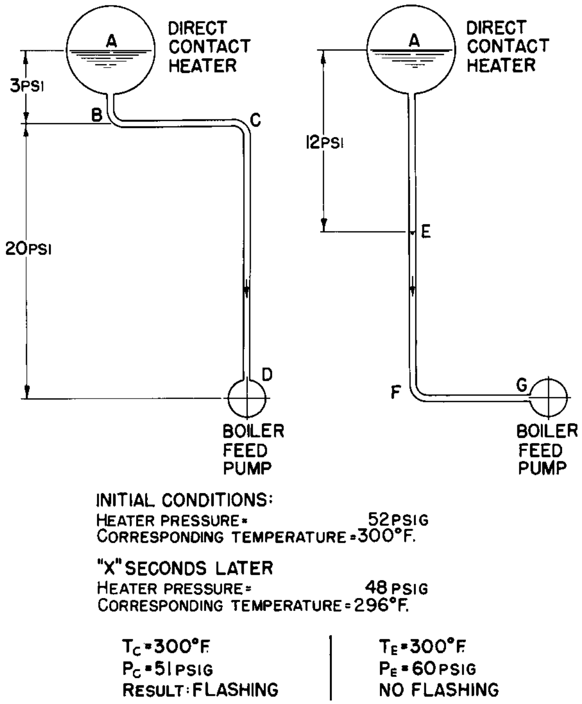

**FIGURE 9** Comparison of suction piping arrangements

determine the adequacy of the piping layout by selecting the critical point in the piping (in this case, point *C*) and substituting in the formulas so $Q_s$ = volume in suction piping to point *C* and $H_x$ = static head to point *C* less frictional losses to point *C*.

In the event that circumstances do not permit the provision of sufficient *NPSH* margin to provide adequate protection to the boiler-feed pumps during a sudden turbine load reduction, two alternate means are available to compensate for these circumstances:

1. A small amount of steam from the boiler can be admitted to the direct-contact heater through a pressure-reducing valve, to reduce the rate of pressure decay in the heater.
2. A small amount of cold condensate from the discharge of the condensate pumps can be made to bypass all or some of the closed heaters and be injected at the boiler-feed pump suction to subcool the feedwater, thus providing additional *NPSH* margin during load reduction.

Figure 10 illustrates the effect of subcooling (or temperature depression) on the available *NPSH* at various initial feedwater temperatures. Figure 11 shows, for varying ratios of injection flows, the temperature depression resulting from cold water injection plotted against the difference in temperature between the feedwater and the injection stream. For instance, if it were desired to provide 20 ft (6.1 m) additional *NPSH* to a boiler-feed pump that handles 325°F (163°C) water, the required temperature depression is 6°F (3.3°C). If the injection water temperature is 190°F (87.8°C), the difference between feedwater and injection water temperature is 135°F (75.2°C). From Figure 11, we can see that the injection flow must be 4.5% of the total feedwater flow.

An analysis of the relative merits of the two methods of protecting boiler-feed pumps against the unfavorable effects of transient conditions is presented in Reference 2. Either

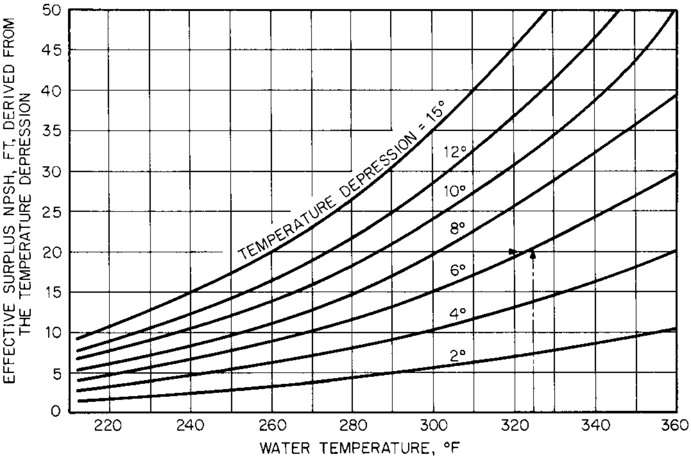

**FIGURE 10** Effect of subcooling on available NPSH at various initial water temperatures. [°C = (°F [min] 32)5/9; 1 ft = 0.3048 m]

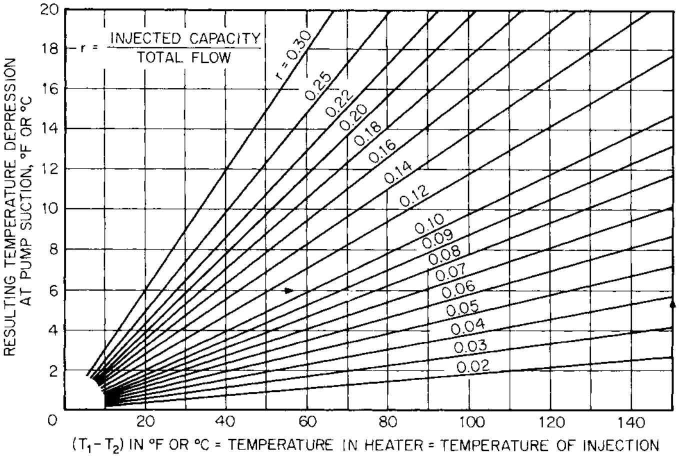

**FIGURE 11** Required amount of cold water injection for a given temperature depression

corrective action can be initiated automatically. This involves constant monitoring of the suction pressure and of the vapor pressure of the feedwater at the pump suction. The difference between the two is then constantly compared with a pre-established minimum *NPSH*. Any transient condition that causes the available *NPSH* to fall below this desired minimum initiates corrective action, be it admission of cold condensate at the pump suction or admission of auxiliary steam to the direct-contact heater.

Another transient condition that will create a two-phase (steam-water mixture) flow at the pump suction—and in the pump—may occur during a "hot restart." When the plant experiences a trip, the pump is secured and the pressure in the deaerator drops. The temperature in the deaerator consequently drops within a relatively short period of time. The feedwater temperature has dropped from perhaps 350°F (175°C) to 250°F

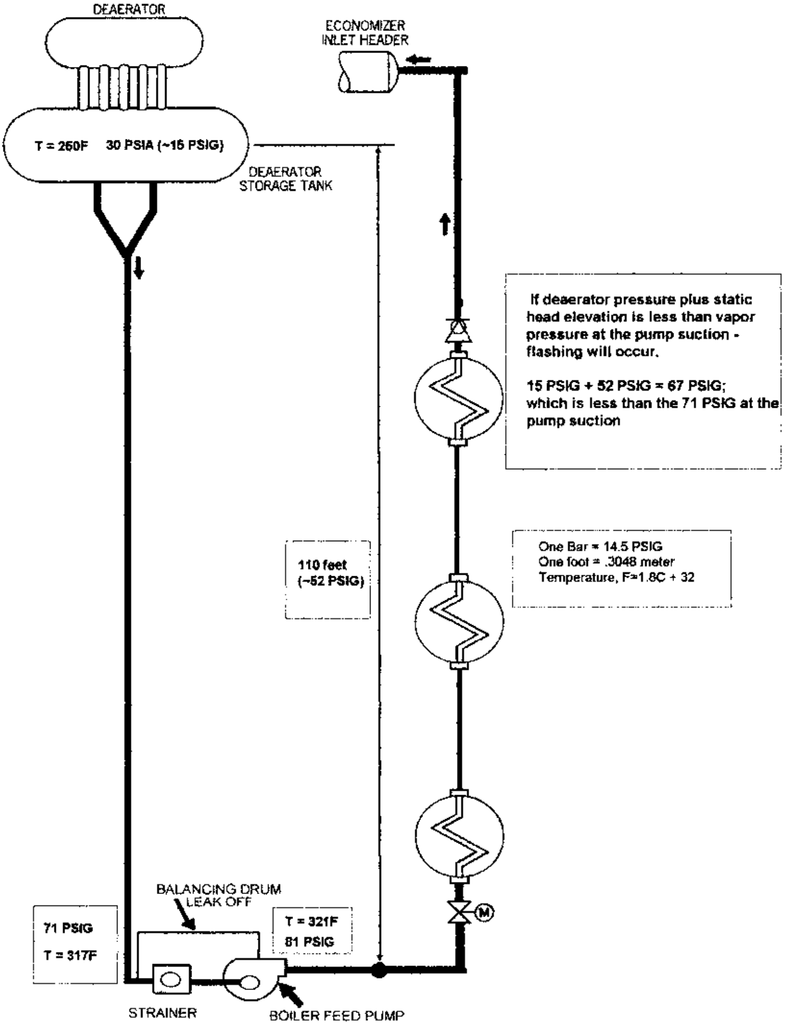

**FIGURE 12** Feedwater system daigram, "hot restart" transient

(120°C). The pump and suction piping near the pump remain at a higher temperature due to the mass of the metal (Figure 12). In a short time, the idle pump is switched on, and a two-phase flow condition occurs at the pump suction. Potential failure mode effects include suction cavitation, rotor upset and contact with stationary wear rings, and water hammer.

## BOOSTER PUMPS

The increasing sizes of modern boiler-feed pumps coupled with the practice of operating these pumps at speeds considerably higher than 3600 rpm have led to *NPSH* requirements as high as 150 to 250 ft (46 to 76 m). In most cases, it is not practical to install the direct-contact heaters from which the feed pumps take their suction high enough to meet such requirements. In such cases, it has become the practice to use boiler-feed booster pumps operating at lower speeds, such as 1750 rpm, to provide a greater available *NPSH* to the boiler-feed pumps than can be made available from strictly static elevation differences. Such booster pumps are generally of the single-stage, double-suction design.

***Discharge Pressure and Total Head*** The discharge pressure is the sum of the maximum boiler drum pressure and the frictional and control losses between the boiler-feed pump and the boiler drum inlet. The required discharge pressure will generally vary from 115 to 125% of the boiler drum pressure. The net pressure to be generated by the boiler-feed pump is the difference between the required discharge pressure and the available suction pressure. This must be converted to a total head, using the formula

in USCS units $$\text{Total head, ft} = \frac{\text{net pressure, lb/in}^2 \times 2.31}{\text{sp. gr.}}$$

in SI units $$\text{Total head, m} = \frac{\text{net pressure, bar} \times 10.2}{\text{sp. gr.}}$$

***Slope of the Head-Capacity Curve*** In the range of specific speeds normally encountered in multistage centrifugal boiler-feed pumps, the rise of head from the point of best efficiency to shutoff will vary from 10 to 25%. Furthermore, the shape of the head-capacity curve for these pumps is such that the drop in head is very slow at low capacities and accelerates as the capacity is increased.

If the pump is operated at constant speed, the difference in pressure between the pump head-capacity curve and the system-head curve must be throttled by the feedwater regulator. Thus the higher the rise of head toward shutoff, the more pressure must be throttled off and, theoretically, wasted. Also, the higher the rise, the greater the pressure to which the discharge piping and the closed heaters will be subjected. However, it is not advisable to select too low a rise to shutoff because too flat a curve is not conducive to stable control; a small change in pressure corresponds to a relatively great change in capacity, and a design that gives a very low rise to shutoff may result in an unstable head-capacity curve, difficult to use for parallel operation. When several boiler-feed pumps are to be operated in parallel, they must have stable curves and equal shutoff heads. Otherwise, the total flow will be divided unevenly and one of the pumps may actually be backed off the line after a change in required capacity occurs at light flows.

As feedwater flows increased in the 650 to 1300 MW fossil central stations and new construction of nuclear power plants occurred, the pump specific speed ($N_S$) increased. [Refer to Section 2.1.] Specific speeds of 1200 to 1500 for typical feedwater pumps increased to 1600 to 2100. The performance curve characteristic for 1200 to 1500 $N_S$ pumps typically has a constantly rising curve slope. The performance characteristic for a pump with a $N_S$ of 1600 to 2100 often will exhibit a depression (change to a very low, or negative slope) at reduced flow rates (Figure 13).

NOTE: If a high specific-speed pump is operated at low loads and reduced flow rates, there is risk of entering a performance curve region that will result in flow instability and surge. High subsynchronous vibrations and possible vane pass energy is excited (Figure 14, $N_S$ = 1700). This operating condition is potentially damaging to the boiler feed pump. Attention to impeller and diffuser areas is critical to prevent this condition from occurring. Underfiled impellers (see Subsection 2.3.1) and high area ratios between the impeller and the diffuser or volute will tend to flatten the performance curve and can result in a depressing effect on the slope of the performance curve.

***Driver Power*** A boiler-feed pump will generally not operate at any capacity beyond the design condition. In other words, a boiler-feed pump has a very definite maximum capacity because it operates on a system-head curve made up of the boiler drum pressure plus

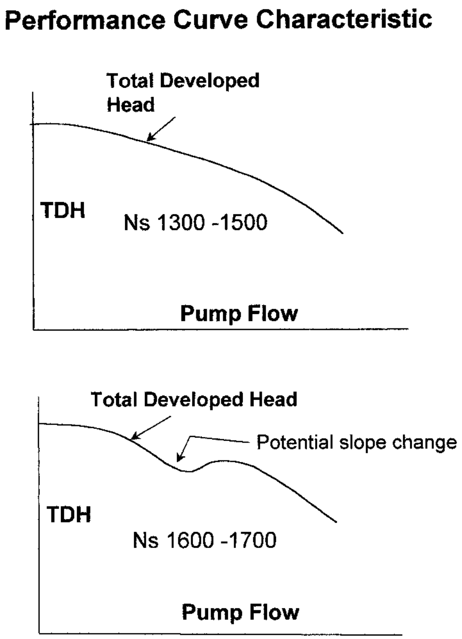

**FIGURE 13** Pump performance curve characteristic—specific speed versus stability (Universal specific speed $\Omega_s = N_s/2733 \bullet N_q$ (in rpm, m$^3$/s, m) = $N_s/51.65$)

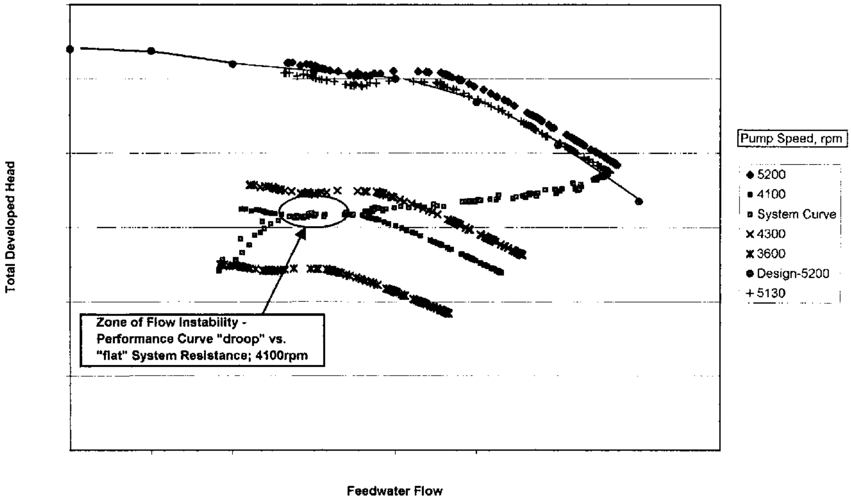

**FIGURE 14** Performance characteristic—28,000 hp boilder feed pump ($N_s$ − 1700) (Universal specific speed $\Omega_s = N_s/2733 \bullet N_q$ (in rpm, m$^3$/s, m) = $N_s/51.65$)

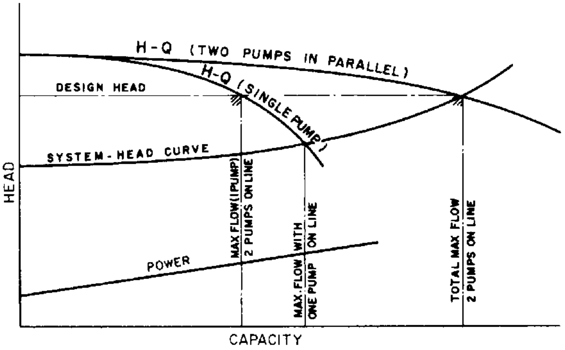

**FIGURE 15** Method of determining maximum pump power for two boiler-feed pumps operating in parallel

the frictional losses in the discharge. If, as it should be, the design capacity of the pump is chosen as the maximum capacity that can be expected under emergency conditions, there can be no further increase under any operating conditions since the pressure requirement corresponding to an increased capacity would exceed the design pressure of the pump. Even when the design pressure includes a safety margin, the boiler demand does not exceed the design capacity, and the feedwater regulator will impart additional artificial frictional losses to increase the required pressure up to the pressure available at the pump.

When two pumps are operated in parallel, feeding a single boiler, the situation is somewhat different. If one of the pumps is taken off the line at part load, the remaining pump could easily operate at capacities in excess of its design because its head-capacity curve would intersect the system-head curve at a head lower than the design head (Figure 15). In such a case, it is necessary to determine the pump capacity at the intersection point; the power corresponding to this capacity will be the maximum expected. It is not always necessary to select a driver that will not be overloaded at any point on the boiler-feed pump operating curve. Although electric motors used on boiler-feed service generally have an overload capacity of 15%, it is usually the practice to reserve this overload capacity as a safety margin and to select a motor that will not be overloaded at the design capacity. Exceptions occur in the case of very large motors. For instance, if the pump brake horsepower is 3100, it is logical to apply a 3000-hp motor, which will be overloaded by about 3% rather than a considerably more expensive 3500-hp motor. Because steam turbines are not built in definite standard sizes but can be designed for any intermediate rating, they are generally selected with about 5% excess power over the maximum expected pump power.

***General Structural Features*** Boiler feed pumps designed for pressures of less than 2500 lb/in$^2$ (172 bar) are generally of the axially split casing type (Figure 16). Some special axially split designs approach 4000 lb/in$^2$ (275 bar) maximum working pressure. Radially split segmental ring-type pumps (Figure 17) are utilized for pressures up to approximately 3500 lb/in$^2$ (240 bar). Radially split, double-case barrel pumps (Figure 18) are in feedwater services up to 6500 lb/in$^2$ (250 bar). The selection of materials for boiler feed pump casings and internal parts is discussed in Section 5.1.

***Nuclear Power Plants*** In oversimplified form, the nuclear energy steam power plant differs from the conventional power plant only in that it uses a different fuel. Thus what is called the secondary cycle (consisting of turbogenerator, condenser and auxiliaries, and boiler-feed pumps) is not very different from its counterpart in the conventional steam power plant. The main differences are a desire for even greater equipment reliability and a preference for an absence or minimum of leakage to avoid any possibility of contamination with radioactive material. One other difference distinguishes most nuclear power

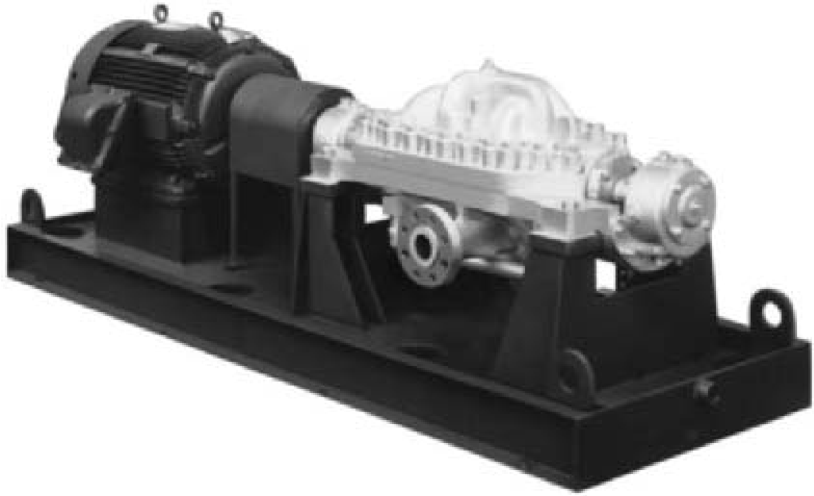

**FIGURE 16** Axially split case multistage boiler feed pump, up to 3500 lb/in$^2$ (241 bar). (Flowserve Corporation)

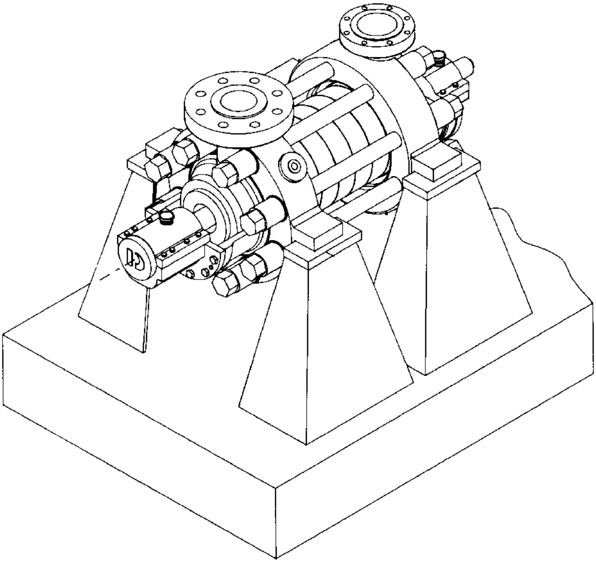

**FIGURE 17** Radially split, segmental ring boiler feed pump (Flowserve Corporation)

plants today from their fossil fuel counterparts: their operating steam pressures and temperatures are much lower. Consequently, in most cases, reactor feed pumps are single-stage pumps; a typical section is shown in Figure 19. The lower operating conditions result in higher heat rates, and the flows—both of the feedwater and of the condenser circulation—are about one-third higher than for fossil fuel power plants of equal megawatt rating.

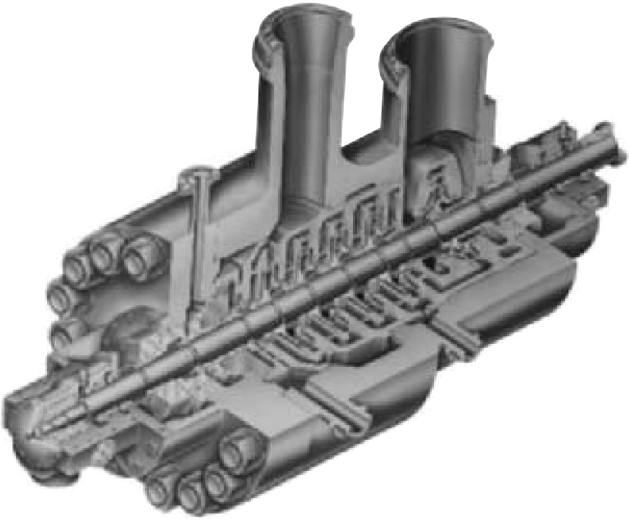

**FIGURE 18** Radially split, double-case, barrel boiler feed pump (Flowserve Corporation)

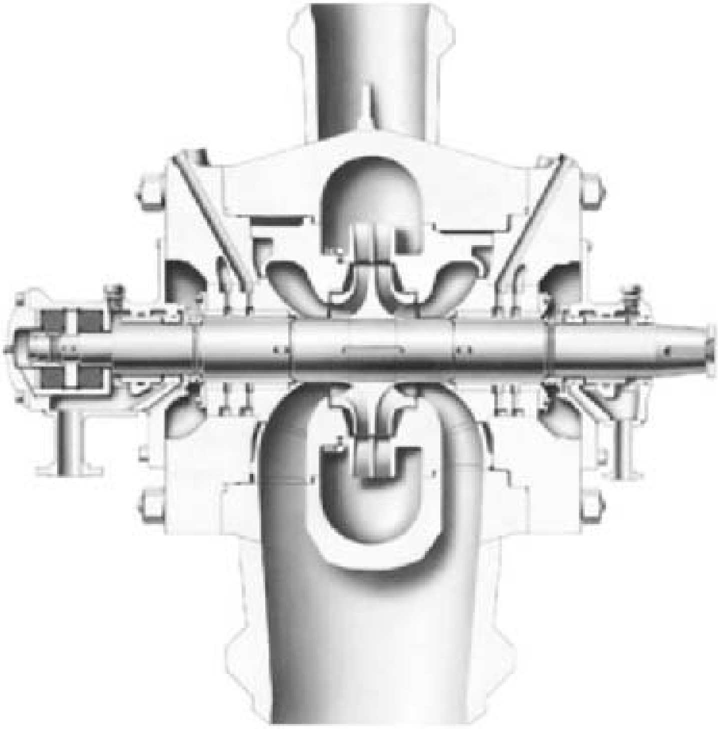

**FIGURE 19** Single stage double suction reactor feed pump, 12,000 horsepower (8950 KW) (Flowserve Corporation)

More detailed information on other nuclear power plant pumping services is given in Subsection 9.14.1.

**High-Speed, High-Pressure Boiler Feed Pumps** As steam pressures rose to 3000—and even to 4500 lb/in$^2$ (200 to 310 bar)—the total head that was required to be developed by the pump rose from around 4000 ft (1220 m) to as high as 7000 and 12,000 ft (2140 and 3660 m). The only means available of achieving these higher heads at 3600 rpm (2-pole motor speed at 60 Hz) was to increase impeller diameter and the number of stages. The pumps had to have longer and longer shafts to accommodate the larger number of stages. This threatened to interfere with the long uninterrupted life between overhauls to which steam power plant operators were beginning to become accustomed. The logical solution was to reduce the shaft span by reducing the number of stages.

In the 1970s, stage pressures rose from around 800 ft/stage to 3000 ft/stage and higher. Several single, 65,000 horsepower (48,500 kW) boiler feed pumps were constructed to support 1300 MW fossil plants (Figure 20). The higher head requirements were achieved by increasing the speed of rotation instead of increasing impeller diameter or stage number. As a result, boiler feed pumps in large central stations today generally operate at speeds from 5000 to 9000 rpm.

**Boiler-Feed Pump Drives** The majority of boiler-feed pumps in small and medium-size steam plants are driven by electric motors. It was the practice to install steam-turbine driven standby pumps as a protection against the interruption of electric power, but this practice has disappeared in central steam stations.

Central stations have trended away from electric motor drives, including those equipped with hydraulic couplings, fluid, and variable frequency drives, to steam turbines for units in excess of 200 MW because

1. The use of an independent steam turbine increases plant capability by eliminating the auxiliary power required for boiler feeding.
2. Proper utilization of the exhaust steam in the feedwater heaters can improve cycle efficiency.
3. In many cases, the elimination of the boiler-feed pump motors may permit a reduction in the station auxiliary voltage.
4. Driver speed can be matched ideally to the pump optimum speed.
5. A steam turbine provides variable-speed operation and better flow compliance to varying plant load and flow demands without an additional component, such as a hydraulic coupling.

Many combined cycle plants are constructed utilizing motor-driven boiler feed pumps to facilitate flexibility in start-up and varying load demands.

Application of variable frequency drive (VFD) motors continues as equipment costs drop. The VFD technology provides variable motor speeds by controlling the frequency input.

**Operation of Boiler-Feed Pumps at Reduced Flows** Operation of centrifugal pumps at shutoff or even at certain reduced flows can lead to very undesirable results. This subject is covered in detail in Subsections 2.3.1 to 2.3.4, Section 8.1, and Chapter 12, where methods for calculating minimum permissible flows and means for providing the necessary protection against operation below these flows are discussed.

Recent experiences have clearly defined the need to understand hydraulic instability, cavitation, and separation as they relate to off-design flow operation.

As deregulation and economic constraints dictate plant load cycling to match electricity demands and operating costs, the large central station boiler feed pumps experience significantly low operating flow. The low flow operation, high impeller suction specific speed, and high inlet tip speeds result in mismatched flow angles, backflow recirculation, and severe suction impeller inlet cavitation damage. This low flow hydraulic instability will also result in damage to pump volute cutwaters and diffuser

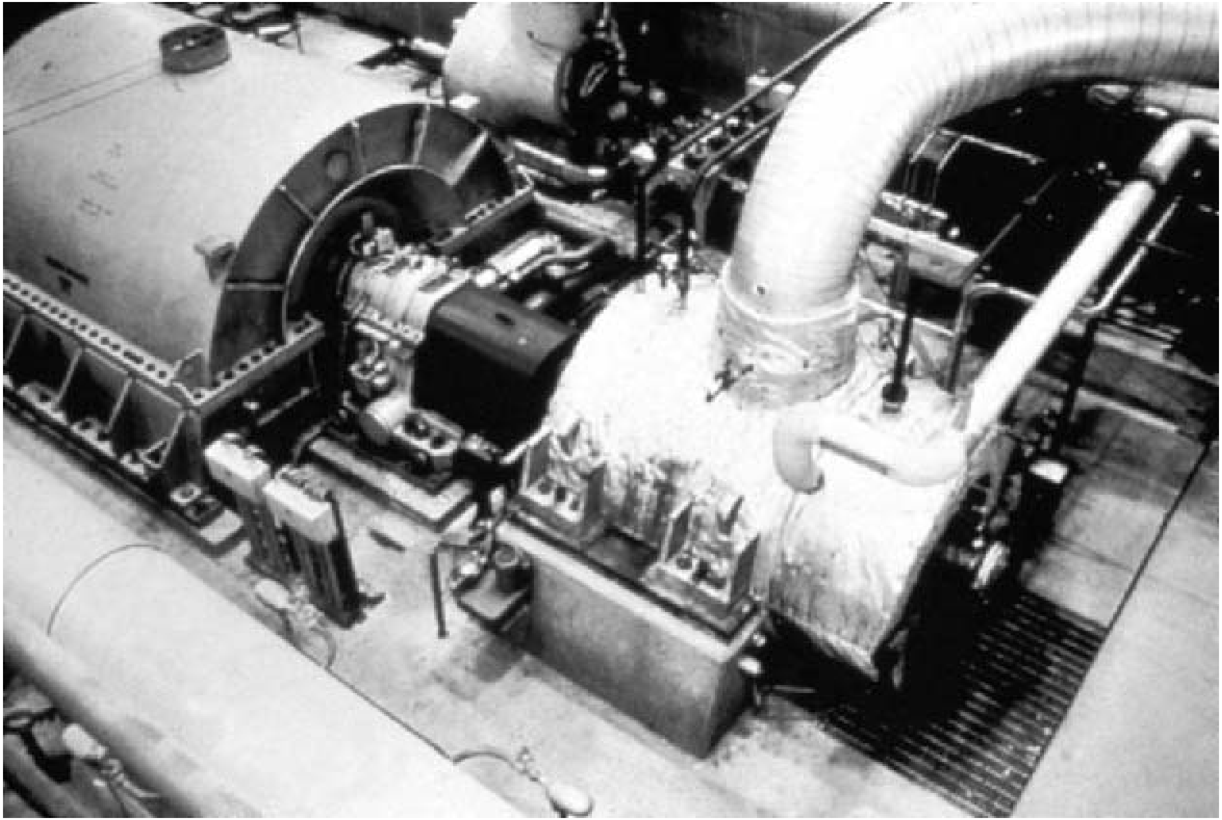

**FIGURE 20** Installation of a single 65,000 horsepower (48,500 kW) boiler pump feed (Flowserve Corporation)

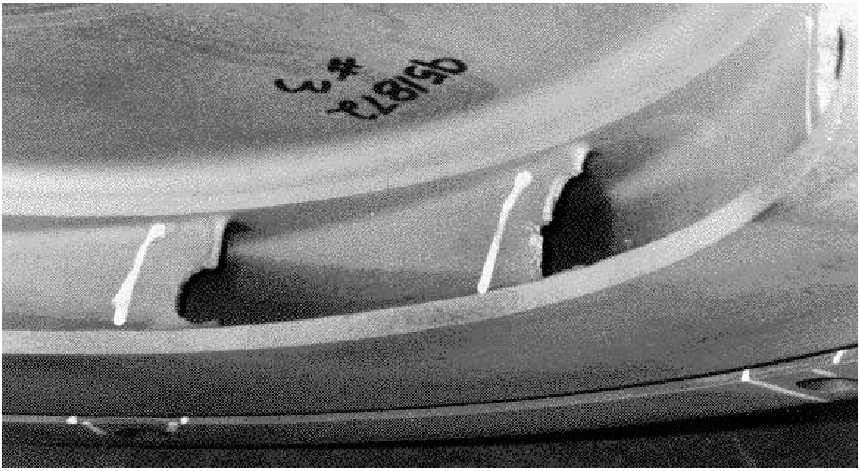

**FIGURE 21** Diffuser inlet vane erosion damage (Flowserve Corporation)

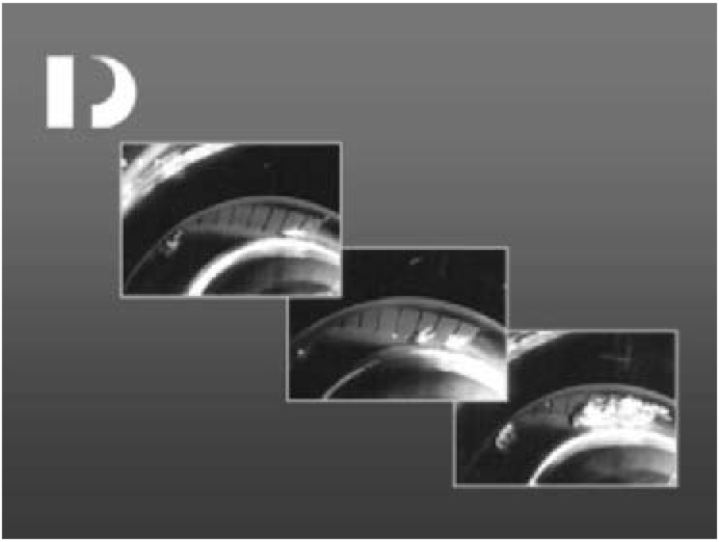

**FIGURE 22** Unsteady vapor cavity behavior, feed pump at low flow (Flowserve Corporation)

vanes (Figure 21). Suction impellers where the suction specific speed exceeds 10,000 and eyebore inlet tip speeds exceed 200 ft/sec. are highly susceptible to this low flow instability and component damage. The series of photos in Figure 22 show a condition typical for many high-energy pumps operating at flows below design levels. They demonstrate how serious low-flow instability can be when it is coupled with two-phase flow activity.

The severity of cavitation erosion is highly dependent on the inlet tip speed of the suction stage impeller, the *NPSHA,* and the thermodynamic properties of the fluid being pumped. The erosion seen in Figure 23 was caused by the collapse of discrete cavitation

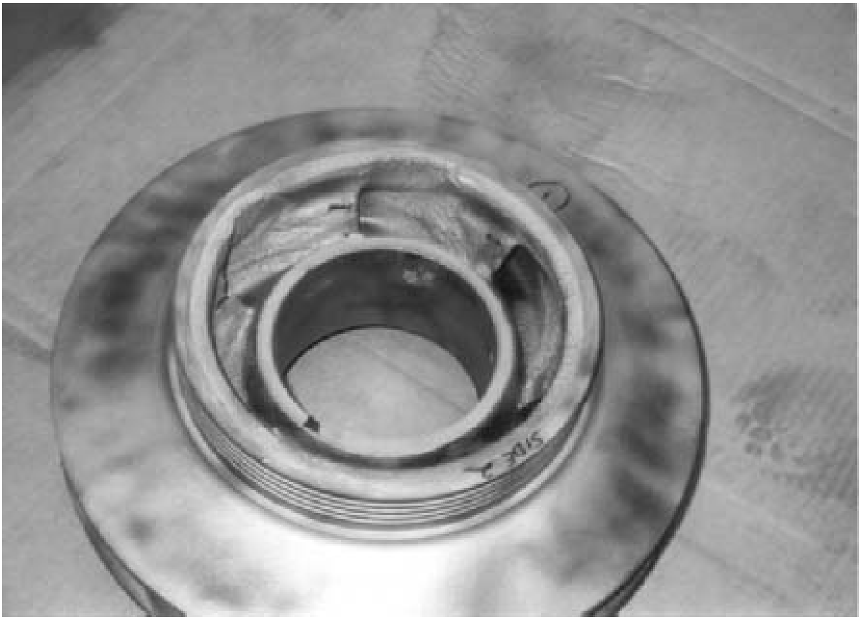

**FIGURE 23** Impeller inlet vane cavitation erosion damage (Flowserve Corporation)

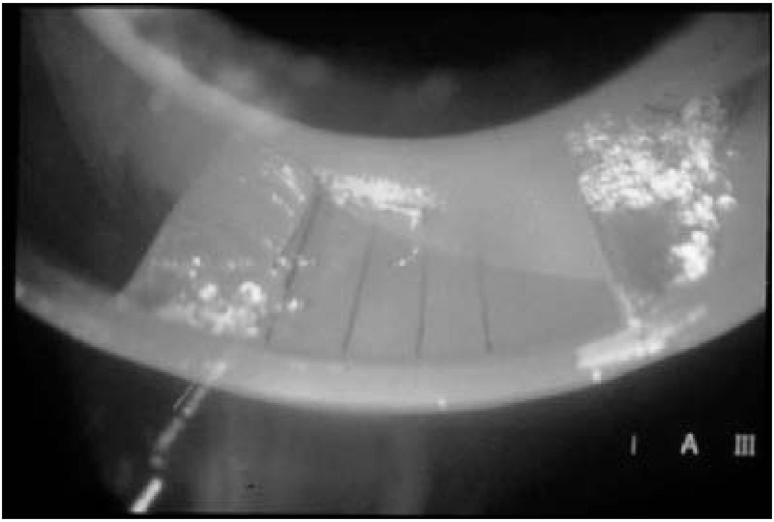

**FIGURE 24** Cavitation vapor bubbles on suction surface of the impeller inlet vane (Flowserve Corporation)

vapor bubbles. Cavitation forms around an impeller blade because of local static pressure falling below the vapor pressure of the liquid being pumped. The vapor cavity shown in Figure 24 is an example of this phenomenon.

With decreasing flow rates (due to operating at off-design conditions), the fluid approaches the impeller blade with larger and larger angles of incidence altering the velocity and pressure fields inside the impeller.

Pumps that are cycled between minimum-flow and flows in excess of the best efficiency point (BEP) create conditions at the impeller in excess of what "fixed geometry" machines can effectively tolerate. Impeller geometry has been shown to influence the degree and severity of cavitation problems experienced with high-energy pumps.

Through the 1980s, attempts were made to pursue "non-traditional" designs of impeller blading. These efforts took the form of profiling the inlet blade in a way that rapidly increased and then decreased the blade thickness.

A new impeller blade design approach, referred to as a "biased-wedge" design, has been found to provide a manufacturable configuration that enables cavitation bubble-free operation over a wide fluid flow range. This design approach is a result of extensive flow visualization test work and computational fluid flow analysis of many impeller geometries. It successfully advances the performance of high-energy pump suction stages to levels not achievable with conventional designs. Dramatic reduction in cavitation activity on the impeller was recorded as seen in the photo (Figure 25) of the suction surface of the final impeller taken at identical positions in the suction inlet and at the same operating conditions (baseload and minimum flow) as Figure 24. The inlet vane air foil shape has proven successful in facilitating feed pump flow rangeability.

***Fundamentals for Successful Operating Life—Efficiency/Reliability*** Best practices for extended successful operating life of pumps are outlined in Chapter 12. Essential fundamentals to emphasize for boiler feed pumps are proper pump warm-up, standby warming, and shaft (fixed bushing) seal drain temperature control. These characteristics have become more critical as central station plants are cycled and large feed pumps are operated with varying loads and in standby modes. Current designs of multistage pumps (Figure 17) installed in combined cycle plants are less sensitive to thermal transients and wide swings in load (pump flow).

Pre-warming of the pump and maintaining warm-up flow to an idle pump to assure dimensional thermal uniformity is essential to maintenance of internal clearances, pump efficiency, and long life. This process is critical for multistage pumps to minimize thermal

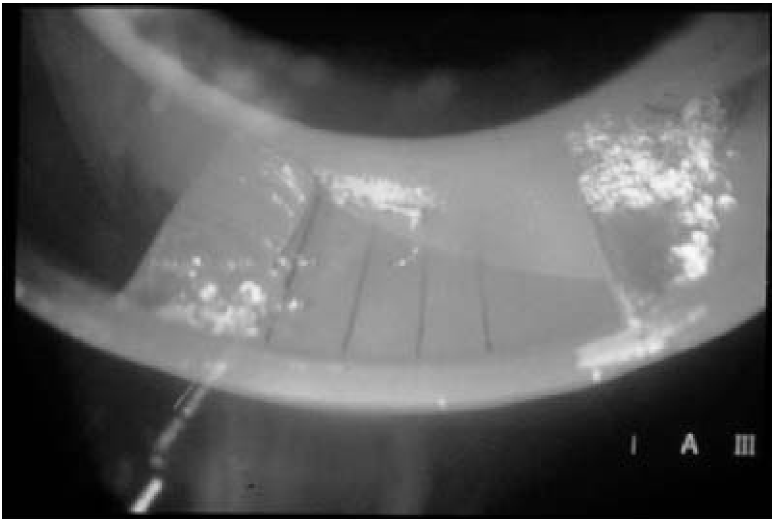

**FIGURE 25** Operation at same flow as Figure 24, improved inlet vane shape—dramatic vapor bubble reduction (Flowserve Corporation)

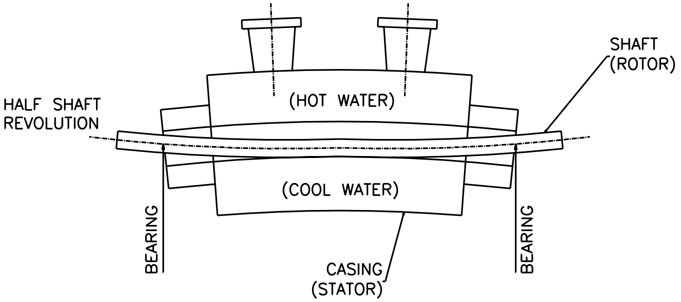

**FIGURE 26** Thermal distortion of feed pump casing and shaft, due to improper warm-up and thermal stratification

stratification within the pump. The distortion, including shaft bowing (Figure 26), will cause the following potential failure modes:

1. Flashing
2. Internal rubbing
3. Increased wear ring clearances
4. Pump seizure
5. Worn seal bushing clearance and excessive leakage
6. Loss of pump performance and efficiency
7. High pump vibration
8. Worn bearings/bearing clearances

Installation features and operating practices that extend pump life, efficiency, and reliability are

1. Proper pump insulation (Figure 27) at the casing and discharge head
2. Warm-up orifice, piped around the discharge check valve. Preference is to inject warm-up flow to the bottom of the pump casing to minimize short-circuiting of the hot feedwater and potential thermal stratification within the casing.
3. Maintaining shaft seal leakage drain temperature (Figure 28) between 150 and 170°F (65 and 77°C); utilize an electro-pneumatic temperature control system.
4. Installation of thermocouples or other temperature-detecting instruments (Figure 29) in the pump casing and discharge head to confirm temperature differences within 50°F (28°C) across the pump and relative to the feedwater temperature.
5. Assurance of proper functioning of the pump casing "pin" and "key" block to allow uniform thermal growth. Confirm that the hold-down bolts for the outboard casing feet are not over-torqued, preventing uniform axial thermal growth as the pump is heated.
6. Assurance of proper location and functioning of critical pipe hangers to minimize pipe strain on the pump suction and discharge nozzles.

## *CONDENSATE PUMPS*

Condensate pumps take their suction from the condenser hot well and discharge either to the deaerating heater in open feedwater systems (refer to Figure 3) or to the suction of the

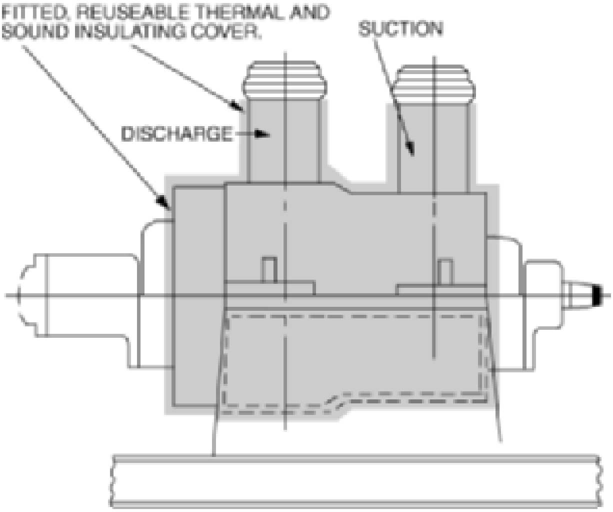

**FIGURE 27** Recommended thermal insulation of a boiler feed pump (Flowserve Corporation)

boiler-feed pumps in closed systems (refer to Figure 6). These pumps, therefore, operate with a very low pressure at their suction. The available *NPSH* is obtained by the submergence between the water level in the condenser hot well and the centerline of the condensate pump first-stage impeller. Because it is desirable to locate the condenser hot well as low as possible and avoid the use of a condensate pump pit, the available *NPSH* is generally extremely low, on the order of 2 to 4 ft (0.6 to 1.2 m). The exception to this occurs when vertical-can condensate pumps are used because these can be installed below ground and higher values of submergence can be obtained. Frictional losses on the suction side must be kept to an absolute minimum. The piping connection from the hot well to the pump should therefore be as direct as possible and of ample size and should have a minimum of fittings.

Because of the low available *NPSH,* condensate pumps operate at relatively low speeds, ranging from 1750 rpm in the low range of capacities to 880 rpm.

It is customary to provide a liberal excess capacity margin above the full-load steam condensing flow to take care of the heater drains that may be dumped into the condenser hot well if the heater drain pumps are taken out of service for any reason.

***Types of Condensate Pumps*** Both horizontal and vertical condensate pumps are used.

Depending on the total head required, horizontal pumps may be either single-stage or multistage. Plants constructed in the 1950s and before utilized horizontally split multistage pumps mounted at the lowest plant level, near the bottom of the condenser. As required condensate flows increased in later years, the common installation incorporated vertical can-type multistage pumps (Figure 30). Combined cycle plants utilize vertical turbine-type multistage condensate pumps (Figure 31). The vertical turbine-type pump is of medium-duty construction and lower in cost than the can-type pump shown in Figure 30.

Figure 32 shows a single-suction, single-stage pump with an axially split casing used for heads up to about 100 ft (30 m). It is designed to have discharge pressure on the stuffing box. The suction opening in the lower half of the casing keeps the suction line at floor level. An oversize vent at the highest point of the suction chamber permits the escape of all entrained vapors, which will be vented back to the condenser and removed by the air-removal apparatus.

Multistage pumps are used for higher heads. A two-stage pump is shown in Figure 33, with the impellers facing in opposite directions for axial balance. By turning the impeller

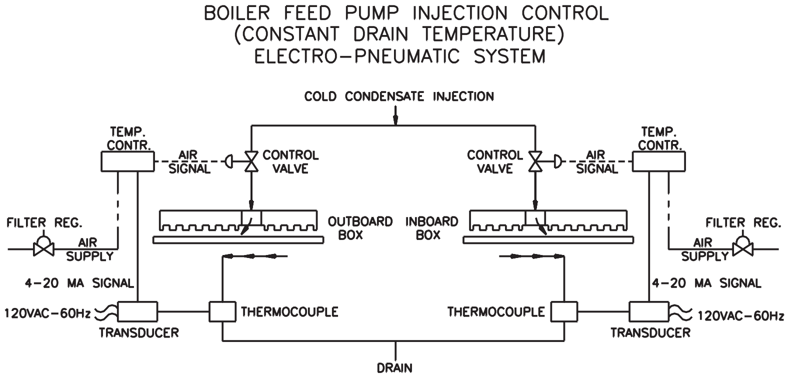

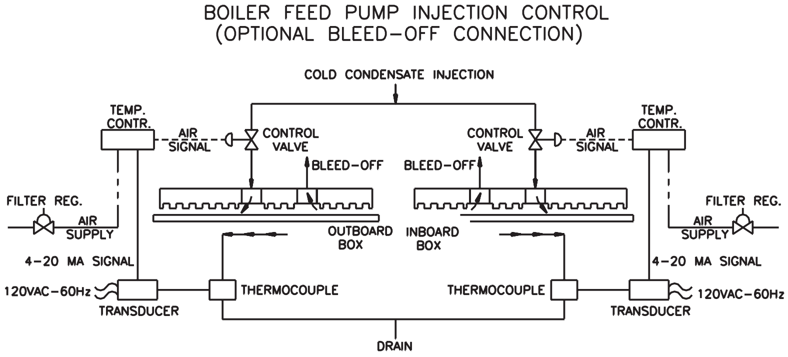

**FIGURE 28** Boiler feed pump shaft seal injection/leakage control system; electro-pneumatic control of constant drain temperature

suctions toward the center, both boxes are kept under positive pressure to prevent leakage of air into the pump. For higher heads and larger capacities, a three-stage pump, as in Figure 34, may be used. The first-stage impeller is of the double-suction type and is located centrally in the pump. The remaining impellers are of the single-suction type and are also arranged so both stuffing boxes are under pressure. Two liberal vents connecting with the suction volute on each side of the first-stage double-suction impeller permit the escape of vapor.

Current plant construction utilizes vertical can-type condensate pumps (Figures 30 and 31). The chief advantage of these pumps is that ample submergence can be provided without the necessity of building a dry pit. The first stage of this pump is located at the bottom of the pumping element, and the available *NPSH* is the distance between the water level in the hot well and the centerline of the first-stage impeller.

Condensate pumps are located very close to the condenser hot well, and the suction piping is generally so short that the frictional losses in this piping are not significant. However, strainers are occasionally installed in this piping, and a great deal of attention must be paid to the frictional losses through them and to their frequent cleaning. Cases have been reported on occasion where the pressure drop across these strainers was sufficient to cause flashing at the suction nozzle of the condensate pumps.

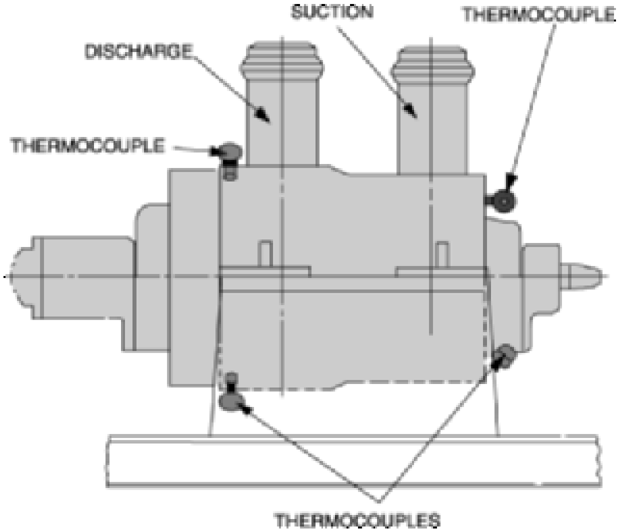

**FIGURE 29** Feed pump casing and discharge head thermocouple installation, to monitor and control uniform temperature distribution (Flowserve Corporation)

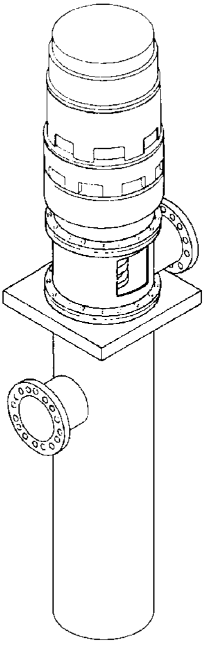

**FIGURE 30** Vertical condensate or heater drain pump (Flowserve Corporation)

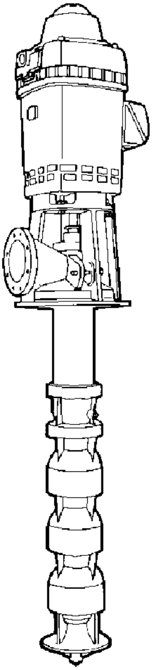

**FIGURE 31** Vertical turbine condensate pump (Flowserve Corporation)

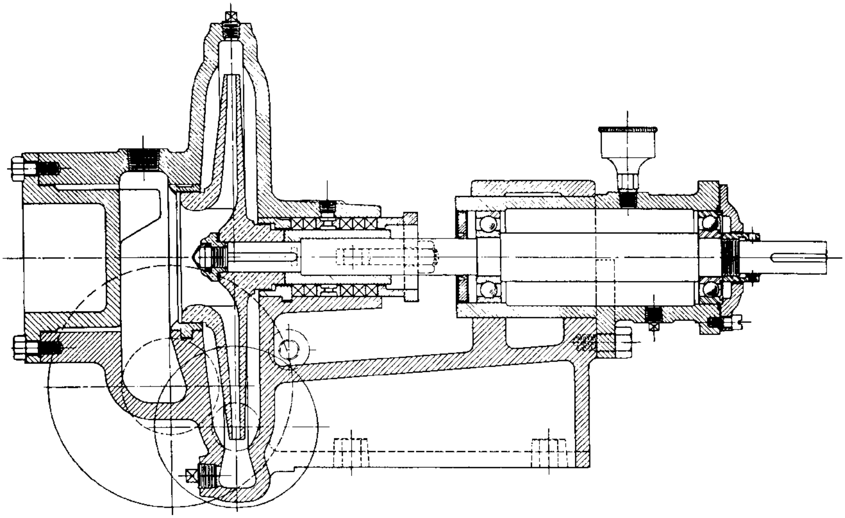

**FIGURE 32** Single-stage horizontal condensate pump with axially split casing (Flowserve Corporation)

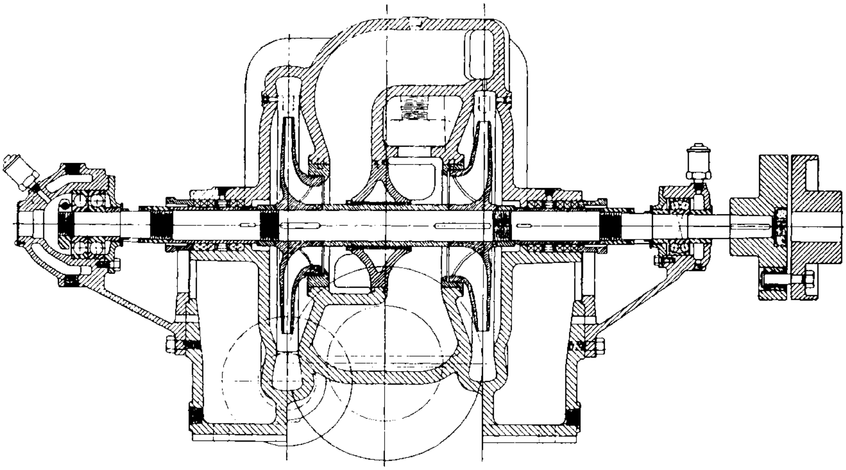

**FIGURE 33** Two-stage horizontal condensate pump with axially split casing (Flowserve Corporation)

The increasing use of full-flow demineralizers in condensate systems and, in the 1960s, the increasing discharge pressures required from the condensate pumps resulted in the need to split condensate pumping into two parts. The condensate pumps proper thus develop only a small portion of the total head required. The balance of the required head was provided by separate condensate booster pumps, which have generally been of the conventional horizontal, axially split casing type. As larger plants were constructed, the vertical can-type multistage condensate pump became the standard.

To prevent air leakage at the stuffing boxes, condensate pumps equipped with packing are always provided with seal cages. The water used for gland sealing must be taken from

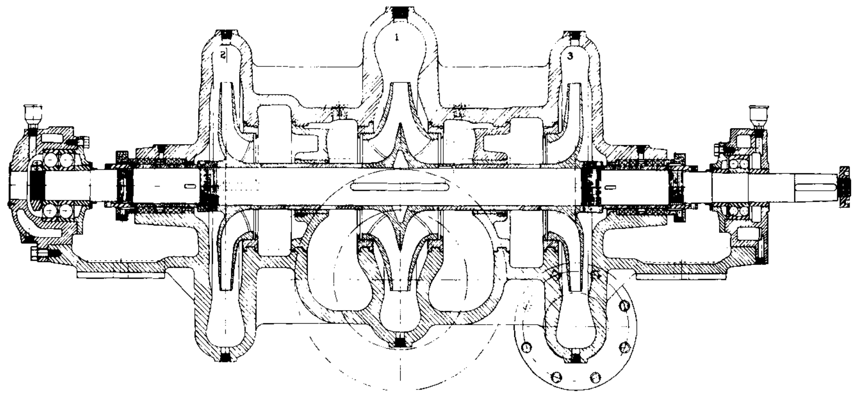

**FIGURE 34** Three-stage horizontal condensate pump with axially split casing (Flowserve Corporation)

the condensate pump discharge manifold beyond all the check valves. Pumps fitted with mechanical seals also use injection of condensate at a pressure higher than atmospheric pressure to prevent air from being drawn into the pump and feedwater system across the seal faces.

Condensate pumps were supplied with cast iron casings and bronze internal parts, but the emergence of once-through boilers has created the need to eliminate all copper alloys in the condensate system to avoid deposition of copper on the boiler tubes. Stainless steel-fitted pumps have become the standard selection for this service.

***Condensate Pump Regulation*** When a condensate pump operates in a closed cycle ahead of the boiler-feed pump, the two pumps can be considered as a combined unit insofar as their head-capacity curve is concerned. Variation in flow is accomplished either by throttling the boiler-feed pump discharge or by varying the speed of the boiler-feed pump.

In an open feedwater system, several means can be used to vary the condensate pump capacity with the load:

1. The condensate pump head-capacity curve can be changed by varying the pump speed.
2. Older plant condensate pump head-capacity curves are altered by allowing the pump to operate in the "break" (Figures 35 and 36).
3. The system-head curve can be artificially changed by throttling the pump discharge by means of a float control.
4. The pump can operate at the intersection of its head-capacity curve and the normal system-head curve. The net discharge is controlled by bypassing all excess condensate back to the condenser hot well.
5. Methods 3 and 4 can be combined so the discharge is throttled back to a predetermined minimum, but if the load, and consequently the flow of condensate to the hot well, are reduced below this minimum, the excess condensate handled by the pump is bypassed back to the hot well.

The impulse for the controls used in methods 1, 3, and 4 is taken from the deaerator level.

Operating in the break, or "submergence control" as it has often been called, was applied successfully in many installations before the 1960s. Condensate pumps designed for submergence control require specialized hydraulic design, correct selection of operating speeds, and limitation of stage pressures. The pump is operating in the break (that is, cavitates) at all capacities. However, this cavitation is not severely destructive because the energy level of the fluid at the point where the vapor bubbles collapse is insufficient to cre-

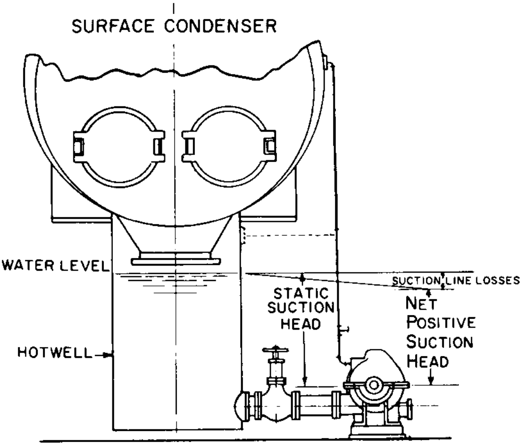

**FIGURE 35** Typical hookup for submergence controlled condensate pump

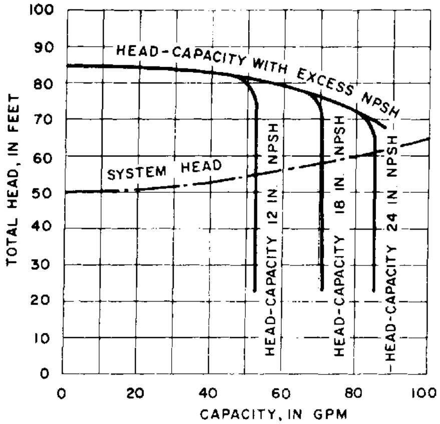

**FIGURE 36** Characteristic of a condensate pump operating on a submergence-controlled system

ate a shock wave of a high enough intensity to inflict physical damage on the pump parts. If, however, higher values of *NPSH* were required—as for instance with vertical-can condensate pumps because of their generally higher operating speed—operation in the break would result in a rapid deterioration of the impellers. It is for this reason that submergence control is not applicable to can-type condensate pumps.

The main advantage of submergence control was its simplicity and the fact that the power required for any operating condition was less than with any other system. Disadvantages occur when the pump is operating at very light loads, however, because the system head may require as little as one-half of the total head produced in the normal head-capacity curve. In this case, the first stage of a two-stage pump produces no head whatsoever and, if the axial balance was achieved by opposing the two impellers, a definite thrust is imposed on the thrust bearing, which must be selected with sufficient capacity to withstand this condition. In addition, no control is available to provide the minimum flow that may be required through the auxiliaries, such as the ejector condenser.

The condensate pump discharge can be throttled by a float control arranged to position a valve that increases the system-head curve as the level in the hot well is drawn down. This eliminates the cavitation in the condensate pump, but at the cost of a slight power increase. Furthermore, the float necessarily operates over a narrow range, and the mechanism tends to be somewhat sluggish in following rapid load changes, often resulting in capacity and pressure surges. This transient condition is often the root cause of failed thrust bearings and axial rotor shifting. Another critical piping arrangement feature is the discharge piping check valve. The check valve in every condensate pump must be below the condenser hotwell level to ensure prevention of air entrapment and start-up waterhammer. [Refer to Section 8.3.]

When condensate delivery is controlled through bypassing, the hot well float controls a valve in a bypass line connecting the pump discharge back to the hot well. At maximum condensate flow, the float is at its upper limit with the bypass closed and all the condensate is delivered to the system. As the condensate flow to the hot well decreases, the hot well level falls, carrying the float down and opening the bypass. Sluggish float action can create the same problems of system instability in bypass control as in throttling control, however, and the power consumption is excessive because the pump always operates at full capacity.

A combination of throttling and bypassing control eliminates the shortcoming of excessive power consumption. The minimum flow at which bypassing begins is selected to provide sufficient flow through the ejector condenser.

A modification of the bypassing control for minimum flow is illustrated in Figure 37, which shows a thermostatic control for condensate recirculation. With practically constant steam flow through the ejector, the rise in condensate temperature between the inlet and outlet of the ejector condenser is a close indication of condensate flow rate through the ejector condenser tubes. Therefore an automatic device to regulate the condensate flow rate can be controlled by this temperature differential. A small pipe is connected from the condensate outlet on the ejector condenser back into the main condenser shell. An automatic valve is installed in this line and is actuated and controlled by the temperature rise of the condensate. Whenever the temperature rises to a certain predetermined figure, indicating a low flow of condensate, the automatic valve begins to open, allowing some of the condensate to return to the condenser and then to the condensate pump, which supplies it to the ejector at the increased rate. When the temperature rise through the ejector condenser is less than the limiting amount, indicating that ample condensate is flowing through the ejector condenser, the automatic valve remains closed.

As condensate flow design demand increased, the vertical multistage pumps were installed as two half-capacity pumps. Flow variation is accomplished by operating one or two pumps and by utilizing the regulating discharge valve.

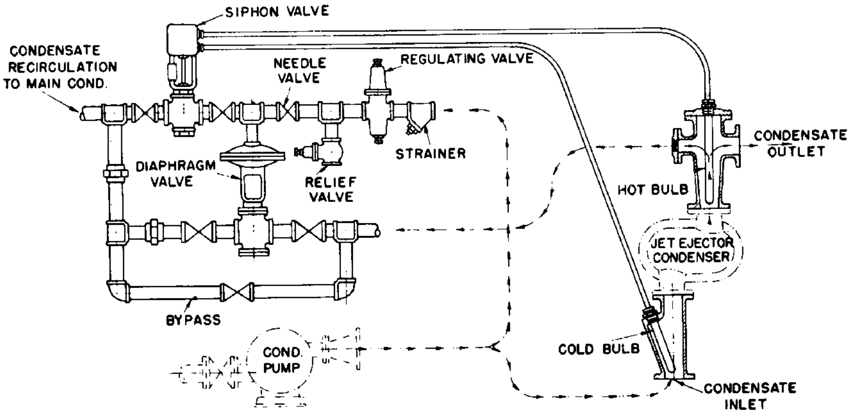

FIGURE 37 Thermostatic control for condensate recirculation

Just as in the case of boiler-feed pumps—or, as a matter of fact, of any pumps—condensate pumps should not be operated at shutoff or even at certain reduced flows. This subject is covered in detail in Subsections 2.3.1 and 2.3.4. Emphasis is placed on the importance of preventing "dead-heading," where the weaker pump in a two-pump system with only one minimum flow protection loop is forced to operate at shut-off or zero flow rate.

## *HEATER DRAIN PUMPS*

***Service Conditions*** Condensate drains from closed heaters can be flashed to the steam space of a lower-pressure heater or pumped into the feedwater cycle at some higher-pressure point. Piping each heater drain to the heater having the next lower pressure is the simpler mechanical arrangement and requires no power-driven equipment. This "cascading" is accomplished by an appropriate trap in each heater drain. A series of heaters can thus be drained by cascading from heater to heater in the order of descending pressure, the lowest being drained directly to the condenser.

This arrangement, however, introduces a loss of heat because the heat content of the drains from the lowest-pressure heater is dissipated in the condenser by transfer to the circulating water. It is generally the practice, therefore, to cascade only down to the lowest-pressure heater and pump the drains from that heater back into the feedwater cycle, as shown in Figure 38. Because the pressure in that heater hot well is low (frequently below atmospheric even at full load), heater drain pumps on that service are commonly described as on "low-pressure heater drain service."

In an open cycle, drains from heaters located beyond the deaerator are cascaded to the deaerator. Although the deaerator is generally located above the closed heaters, the difference in pressure is sufficient to overcome both the static and the frictional losses. This difference in pressure decreases with a reduction in load, however, and at some partial main turbine load it becomes insufficient to evacuate the heater drains. They must be switched to a lower-pressure heater or even to the condenser, with a subsequent loss of heat. To avoid these complications, a "high-pressure heater drain pump" is generally used to transfer these drains to the deaerator. Actually, this pump has a "reverse" system head to work against; at full load, the required total head may be negative, whereas at light loads, the required head is at its maximum.

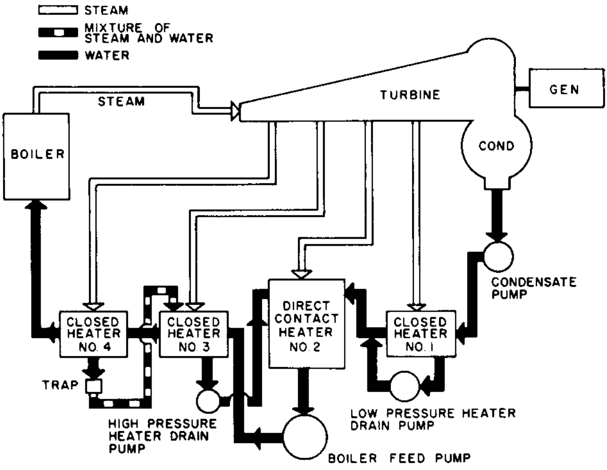

**FIGURE 38** Typical arrangement for heater drain pumps

High-pressure drain pumps are subject to more severe conditions than boiler-feed pumps encounter:

1. Their suction pressure and temperature are higher.
2. The available *NPSH* is generally extremely limited.
3. They are subject to all the transient conditions to which the feed pump is exposed during sudden load fluctuations, and these transients are more severe than those at the feed pump suction.

**Types of Heater Drain Pumps** In the past, heater drain pumps were often horizontal, either single-stage or multistage, depending upon total head requirements. In the single stage type, end-suction pumps of the heavier "process pump" construction (Figure 43) were preferred for both low- and high-pressure service. Current construction features the vertical can-type pump (Figure 30) on heater drain services. As previously described, the advantages of the vertical can pump are lower first cost and a built-in additional *NPSH* because the first-stage impeller is lowered below floor level in the can. Against these advantages, one must weigh certain shortcomings. A horizontal heater drain pump is more easily inspected than a can pump. The external grease- or oil-lubricated bearings of the horizontal pump are less vulnerable to the severe operating conditions during swinging loads than the water-lubricated internal bearings of the can pump. If vertical can heater drain pumps have a bearing in the suction bell, consideration must be given to the fact that the water in the immediate location of that bearing is at near saturated pressure and temperature conditions (high temperature and low pressure). To keep the water in the bearing from flashing, additional water should be piped back to the bearing from a higher stage.

Heater drain pumps should be adequately vented to the steam space of the heater. Because heater drain pumps and especially those on low-pressure service may operate with suction pressures below atmospheric, it is necessary to provide a liquid supply to the seal cages in the stuffing boxes. Low-pressure heater drain pumps use cast iron casings and bronze fittings if no evidence of corrosion erosion has been uncovered. On high-pressure services, stainless steel components are generally mandatory and 12% chrome stainless steel casings are preferred.

## CONDENSER CIRCULATING PUMPS

**Types of Pumps** Condenser circulating pumps may be of either horizontal or vertical construction. For many years, the low-speed, horizontal, double-suction volute centifugal pump (Figure 39) was the preferred type. This pump has a simple but rugged design that allows ready access to the interior for examination and rapid dismantling if repairs are required.

The larger central station and combined cycle power plants have switched to wet-pit vertical pumps that are either fully or partially submerged in the water pumped. Central stations also installed vertical dry-pit pumps in the 1950s and 1960s. These dry-pit designs are large vertical volute casing pumps surrounded by air.

**Mechanical Considerations** The dry-pit installation was a single-suction, medium-specific-speed, mixed-flow pump (Subsection 2.2.1, Figure 109). This design combined the high efficiency and low maintenance of the horizontal double-suction radial-flow centrifugal pump with lower cost and slightly higher rotative speeds.

Because of their suction and discharge nozzle arrangements, these pumps are ideally suited for vertical mounting in a dry pit, preferably at the lowest water level, so they are self-priming on starting. They are directly connected to solid-shaft induction or synchronous motors, either close-coupled or with intermediate shafting between the pump and the motor, which is then mounted well above the pump pit floor.

Like the horizontal double-suction pump, the vertical dry-pit mixed-flow pump is a compact and sturdy piece of equipment. Its rotor is supported by external oil-lubricated bearings

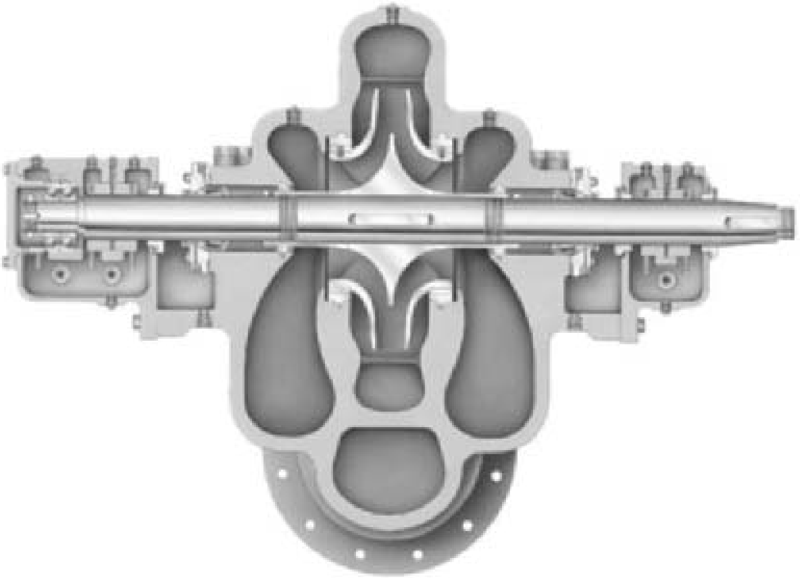

**FIGURE 39** Horizontal double suction single stage pump, IDP model LN (Flowserve Corporation)

of optimum design. This construction requires the least attention, for the oil level can be easily inspected by means of an oil sight glass mounted at the side of the bearing or oil reservoir.

Because the rotor is readily removed through the top of the casing, facilitating maintenance and replacement, the pump does not have to be removed from its mounting and the suction and discharge connections do not have to be broken to make periodic inspections or repairs.

In recent years, power plant designers have shown a preference for the wet-pit column-type condensate circulating pump. The term *wet-pit* normally implies a casing diffuser-type pump, employing a single open vane impeller. The wet-pit pump (Figure 40) employs a long column pipe that supports the submerged pumping element. It is available with open main shaft bearings lubricated by the water handled, or with enclosed shafting and bearings, lubricated by clean, fresh, filtered water from an external source. There is some danger of contamination of the lubricating water from seepage into the shaft enclosure tube during shut-downs.

Pulling up the column in a long pump requires special facilities and, in addition, the discharge flange must be disconnected when withdrawing the pump and column from the pit. This design has been designated a “non-pull-out” design (Figure 40). To avoid the necessity of lifting the entire pump when the internal parts require maintenance, some units are built so the impeller, impeller shroud, casing, and shaft assembly can be removed from the top without disturbing the column pipe assembly. (The driving motor must be removed.) These designs are commonly designated “pull-out” designs (Figure 41).

Condenser cooling water is often corrosive. Power plants are often located near salt or brackish bodies of water. Plants near rivers often encounter water contaminated with high silt levels. With such waters, selection of materials can be critical to long service life. Material selection for sea water applications must also consider the potential for electrolytic (galvanic) corrosion.

***Performance Characteristics*** Condenser circulating pumps are normally required to work against low or moderate heads. Extreme care should be exercised in calculating the system frictional losses, which include losses from friction in the condenser. If more total

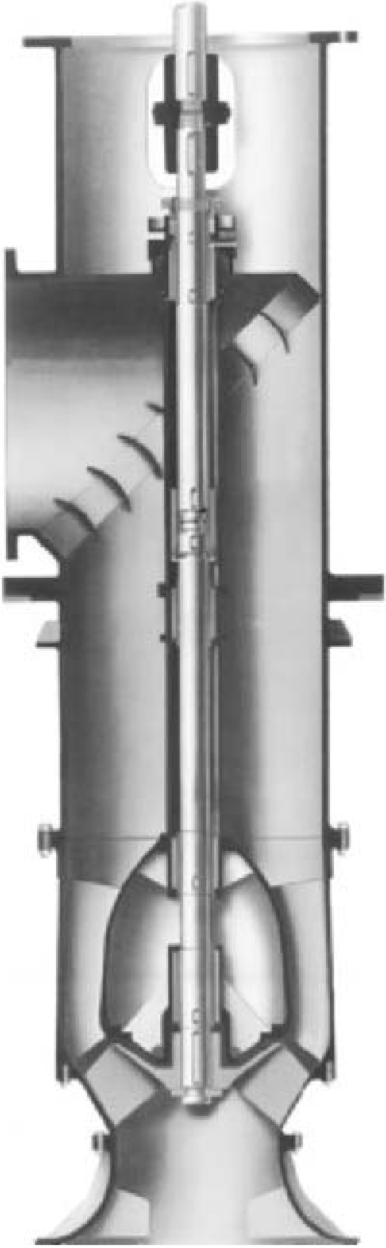

**FIGURE 40** Vertical wet pit circulating water pump (non-pull-out) (Flowserve Corporation)

head is specified than is required, the resulting driver size may be unnecessarily increased. For instance, an excess of 1 or 2 ft (0.3 or 0.6 m) in an installation requiring only 20 ft (6 m) of head represents an increase of 5 to 10% in excess power costs.

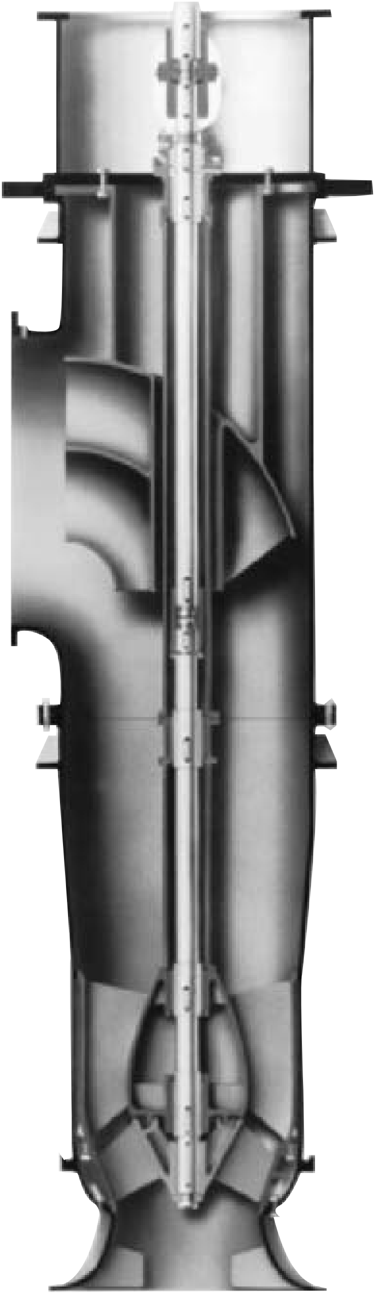

**FIGURE 41** Vertical wet pit circulating water pump (pull-out) (Flowserve Corporation)

The range of suction lift for dry-pit pumps must be determined very accurately and checked with the manufacturer to ensure that cavitation will be avoided in the installation. Priming facilities must be provided, or the pump must be installed in a dry pit at such an elevation that the water in the suction channel leading to the pump will be maintained at the level recommended by the manufacturer. This presents no problem in a wet-pit installation because the pump column can be made long enough to provide adequate submergence, even with minimum water levels in the suction well or pit. The dry-pit pump will generally have 3 to 4% higher efficiency than the wet-pit type and therefore 3 to 4% lower power consumption. The two types are available for the same specific speed range. When pumping total head is 25 ft (7.6 m) or less, an axial-flow propeller (approximately 10,000 specific speed in USCS units) can be used in either type of pump.

The low-specific-speed, double-suction pump has a very moderate rise in head with reducing capacities and a nonoverloading power curve with a reduction in head. The mixed-flow impeller with a higher specific speed has a steeper head-capacity curve and a reasonably flat power curve that is also nonoverloading. As the specific speed increases, the steepness of the head-capacity curve increases and the curvature of the power curve reverses itself, hitting a maximum at the lowest flow. Finally, the curve of a high-specific-speed propeller pump has the highest rise in both head-capacity and power-capacity curves toward zero flow. The head range developed by the mixed-flow pump is ideal for condenser service; this pump is usually furnished with an enclosed impeller, which produces a relatively flat head-capacity curve and a flat power characteristic.

Higher head circulating water pumps were developed in the 1970s as cooling towers were introduced to improve plant efficiency and environmental contamination. The cooling tower arrangement effectively increased the total system resistance head requirements.

***System Hydraulics*** The dry-pit pump is not too sensitive to the suction well design because the inlet piping and the formed design of the suction passages into the pump normally ensure a uniform flow into the eye of the impeller. On the other hand, the higher-speed wet-pit pumps are more sensitive to departures from ideal inlet conditions than the low-speed centrifugal volute pump or the medium-speed mixed-flow pump. A discussion of the arrangements recommended for wet- and dry-pit pump installations is presented in Section 10.1.

***Drivers*** Whether a dry-pit or a wet-pit pump is used, the axial thrust and weight of the pump rotor are normally carried by a thrust bearing in the motor, and the driver and driven shafts are connected through a rigid coupling. The higher rotative speeds of the wet-pit pumps reduce the cost of the electric motors somewhat. This difference may be offset, however, by the fact that the thrust load of the wet-pit pump is higher than that of the dry-pit pump.

## BOILER CIRCULATING PUMPS

The forced circulation, or controlled circulation, boiler requires the use of circulating pumps that take their suction from a header connected to several downcomers, which originate from the bottom of the boiler drum and discharge through the various tube circuits operating in parallel (Figure 42). The circulating pumps therefore must develop a pressure equivalent to the frictional losses through these tube circuits. Thus, in the case of different boilers operating in pressure ranges from 1800 to 3000 lb/in$^2$ (124 to 207 bar), the boiler circulating pump must handle feedwater from 620 to 690°F (326 to 365°C) under a suction pressure of 1800 to 2900 lb/in$^2$ (124 to 200 bar). Such a combination of high suction pressure and high water temperature at saturation imposes very severe conditions on the circulating pump stuffing boxes, making it necessary to develop special designs for this part of the pump.

The net pressure to be developed by these pumps is relatively low, ranging from 50 to 150 lb/in$^2$ (3.4 to 10.3 bar). Hence these are single-stage pumps with single-suction impellers and a single stuffing box. The high boiler pressure imposes an extremely severe axial thrust on the

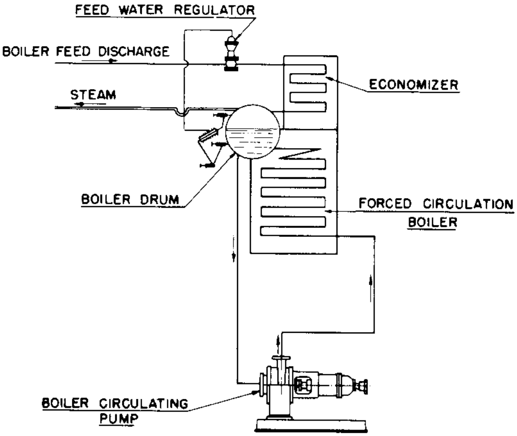

**FIGURE 42** Forced, or controlled, circulation system

pump, placing a load of several tons on the thrust bearing. In many cases, a thrust-relieving device must be incorporated to permit pump start-up. Two general types of construction are used for this service: (1) the conventional centrifugal pump with various stuffing box modifications (Figure 43) and (2) the submersible motor pump of either the wet- or dry-stator type (Figure 44). In the lower boiler pressure range-up to 500 or 600 lb/in$^2$ gauge (34 or 41 bar), the construction shown in Figure 45 may be used. The pump is of the same general type as is used on high-pressure heater drain service. The packed stuffing box or mechanical seal is preceded by a pressure-reducing bushing. Feedwater from the boiler-feed pump discharge, at a temperature lower than in the boiler drum and at a pressure somewhat higher than pump internal pressure, is injected into the middle of this bushing. Part of this injected feedwater proceeds toward the pump interior, making a barrier against the outflow of high-temperature water. The rest proceeds outward to a bleed portion of the bushing, from where it is bled to a lower pressure, often the deaerator. The packing or mechanical seal needs to withstand only the lower boiler-feed pump temperature and a much lower pressure than boiler pressure.

More sophisticated designs are required for pressures from 1800 to 3000 lb/in$^2$ gauge (124 to 207 bar) (Figure 43). The shaft is sealed by two floating ring pressure breakdowns and a water-jacketed stuffing box. Boiler feedwater is injected at a point between the lower and upper stacks of floating ring seals at a pressure about 50 lb/in$^2$ (3.5 bar) above the pump internal pressure. Here again, part of this injection leaks into the pump interior and the rest leaks past the upper stack of seals to a region of low pressure in the feed cycle. Leakage to atmosphere is controlled by the conventional stuffing box located above the upper stack. The seal injection and leakoff control system is very sensitive to boiler and feedwater pump transients. Loss of injection results in flashing in the sealing chamber and failure of the sealing rings. Current technology utilizes a two-stage, high-pressure mechanical seal. This eliminates the need for a separate seal injection system and seal-injection booster pump.

The available *NPSH* may not be sufficient at start-up, when the water in the boiler is cold and the pressure is low. Therefore certain installations include two-speed motors so a lower *NPSH* is required at start-up. There is an added advantage to this arrangement: under normal operating conditions, the feedwater will heat boiler saturation temperature and therefore will have a specific gravity of as low as 0.60; at start-up, however, the specific gravity will be 1.0. The power consumption on cold water would therefore be some 65% higher than in normal operation if the pump operates at the same speed, and a much larger motor would be required. If a two-speed motor is used, however, the pump is operated at lower speed when the water is cold, and the motor need be only large enough to supply the maximum power required under normal operating conditions.

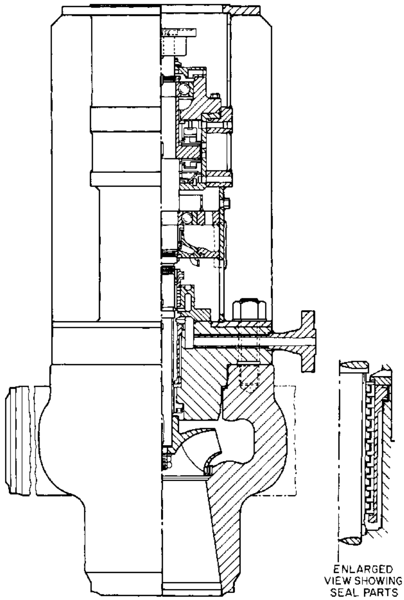

**FIGURE 43** Vertical injection-type boiler circulating pump for high pressures (Flowserve Corporation)

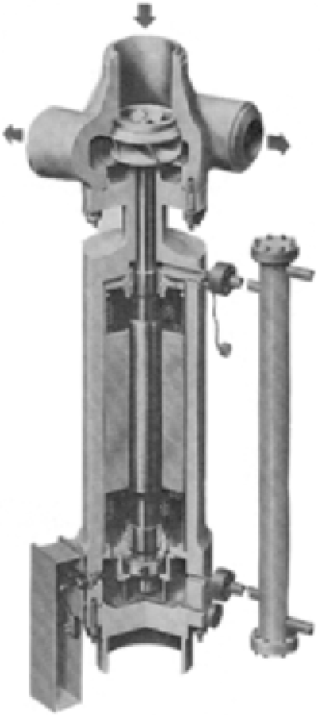

**FIGURE 44** Boiler circulating pumps driven by a wet stator motor (Hayward Tyler)

**FIGURE 45** End-suction boiler circulating pump for low-pressure range (Flowserve Corporation)

## ASH-HANDLING PUMPS

Boilers that use solid fossil fuels produce refuse that is generally classified as ash and includes bottom ash or slag, fly ash, and mill rejects such as pyrites and so on. This refuse

**FIGURE 46** Horizontal single stage double suction, high head pump (Flowserve Corporation)

must be removed and disposed of, either by hydraulic or pneumatic conveying. The latter, of course, does not involve the use of pumps and need not be discussed here.

Fly ash and bottom ash is removed from the boiler system through a series of water ejectors. Centrifugal pumps provide the water, taken from either the circulating water pump header or ash-settling pond. These pumps (Figure 46) are subjected to severe duty as pump flows vary significantly and the pumpage is often contaminated with suspended silt or fly ash.

Hydraulic conveying is generally restricted to bottom ash and mill rejects. There are a great number of different systems in use today, and the reader should consult boiler design and operation literature to become acquainted with this subject. What is common to most hydraulic conveying systems is that they use centrifugal pumps to handle concentrated ash slurries that may contain considerable amounts of coarse, heavy pieces of stone, slate, and iron pyrites. Pumps suitable for this service are described in detail in Subsection 9.16.2.

## REFERENCES

Liao, C. S., and Leung, P. "Analysis of Feedwater Pump Suction Pressure Decay." *ASME J. Eng. Power,* April 1972, p. 33.

Liao, C. S. "Protection of Boiler Feed Pump Against Transient Suction Pressure Decay." *ASME J. Eng. Power,* July 1974, p. 247.

## FURTHER READING

Karassik, I. J. "Steam Power Plant Clinics." A series of articles in *Combustion Engineering*, 1958 through 1976.